G-11

MAR 9 1959

VULCAN *Electric*

COMMERCIAL COOKING EQUIPMENT

RANGES • BROILERS • FRYERS • BAKE OVENS • ROAST OVENS
EXPANDO UNITS • HIGH SHELVES • SPREADER PLATES

VULCAN-HART MANUFACTURING CO., Louisville, Baltimore.

U. S. Patent Office
MAR 9 1959
Division

VH—201

VULCAN *Electric*

HEAVY DUTY RANGES

Model VR-1 ☐ Model VW-1 ☐ Model VS-1 ☐

MODEL VR-1 RANGE WITH OVEN

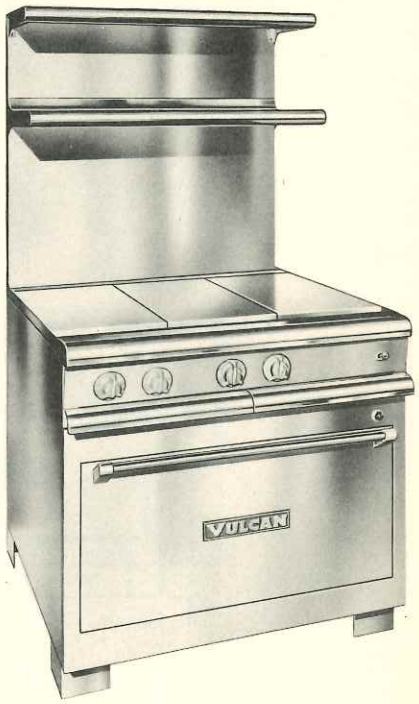

MODEL VW-1 RANGE WITH WARMING OVEN AND HIGH SHELF

MODEL VS-1 RANGE WITH STORAGE COMPARTMENT

SPECIFICATIONS

TOP: Surface cooking area to be 36″ x 24″ consisting of 3-12″ x 24″ sections. Two controlled by a 3-heat switch. One plate, Thrift-E-Plate, to have two heating units front and back and each controlled by a 3-heat switch for added flexibility. Each section made of high quality non-warping alloy, ground and polished. Coil type heating units are supported in porcelain insulators and fitted between ribs on the bottom of the plate. Heating units are heavily insulated and completely enclosed. Each top plate rated at 5000 watts. Full width drip trays are provided under surface area. All switches and thermostats mounted on switch panel at convenience level.

OVEN: Large oven 31½″ deep x 23½″ wide x 13″ high is finished in vitreous enamel. Oven is equipped with top and bottom heating elements, each controlled by a 3-heat switch for measured directional heat. Oven is controlled by a thermostat with a range of 150 degrees F. to 550 degrees F. Oven pilot light is mounted on upper door frame. Oven is insulated with 2″ of spun glass fibre. Drop type oven door with full width handle provides a shelf in line with oven deck. An extra strong oven rack is provided which fits in U type channels on each side of oven. Oven sides are embossed for full circulation of heat. Door is suitably insulated with 1½″ of spun glass fibre.

CONSTRUCTION: One piece stainless steel front, no cracks or seams to pick up grease etc., removable 5″ stainless steel backsplash. Units may be placed back to back for island installations. Front top of range of high grade steel chrome plated for easy cleaning and long life. Deep troughs run the full width of the range front and back to catch excess spill overs.

FINISH: Body sides and back of unit painted and baked in clear and durable Silvertone finish. Front of range and backsplash all stainless steel standard finish. Entire oven and interior of oven door of vitreous enamel. Stainless steel sides and back optional extra.

OPTIONAL UNITS: Range top may be obtained with an open compartment base (with center shelf) shown as VS-1. It may also be obtained with a warming cabinet using a 500 watt heating unit operated by an on and off switch. Unit is provided with a drop type door similar in design and finish to oven door.

VULCAN·HART MANUFACTURING CO.
3600 North Point Boulevard, Baltimore 22, Maryland

VULCAN

Heavy Duty *Electric* Ranges

DIMENSIONS AND ELECTRIC DATA

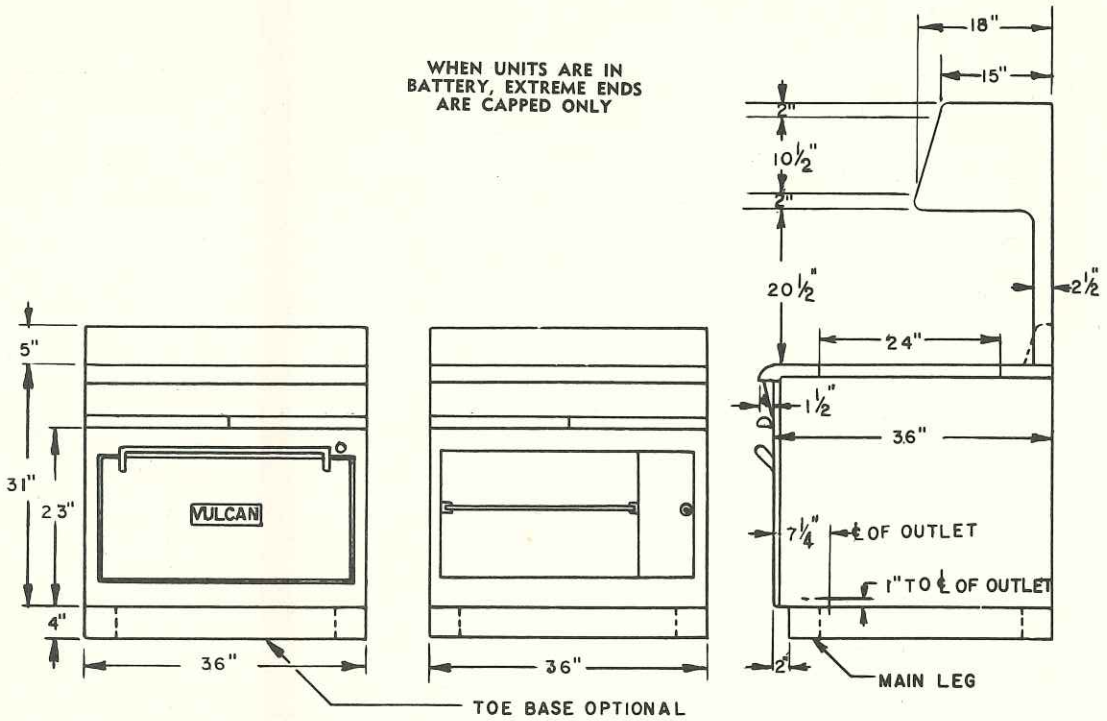

STANDARD VOLTAGES—208 VOLTS OR 240 VOLTS A.C.—SINGLE PHASE OR THREE PHASE

Dimensions & Weights

RANGE

Wide	36″
Height	31″
Height with legs	35″
Depth	36″

OVEN DIMENSIONS

Wide	23½″
Height	13″
Depth Door Closed	31½″

Approx. Weight

	SHIPPING	INSTALLED
VR-1	680	590
VS-1	560	475
VW-1	625	540

NOTE: Legs or toe base optional — No charge. Specify when ordering.

UNIT	TOTAL K.W. CONN.	3-PHASE LOADING KW PER PHASE		
		X-Y	Y-Z	X-Z
VR-1	21.7	10.	5.	6.7
VS-1	15.0	5.	5.	5.
VW-1	15.5	5.	5.	5.5

NOMINAL AMPS. PER LINE WIRE

	3-Phase						1-Phase	
	208 V.			240 V.			208 V.	240 V.
	X	Y	Z	X	Y	Z		
VR-1	67	63	46	59	51	40	104	90
VS-1	41	41	41	35	35	35	72	63
VW-1	44	41	44	38	35	38	75	65

SEE BROILER SHEET FOR RANGE & BROILER LOADING

Vulcan Hart Manufacturing Co., 3600 North Point Boulevard, Baltimore 22, Maryland

LOUISVILLE • NEW YORK • CHICAGO • LOS ANGELES • SAN FRANCISCO • BOSTON

VH—202

VULCAN *Electric*

HEAVY DUTY RANGES

Model VR-2 ☐ Model VW-2 ☐ Model VS-2 ☐

MODEL VR-2 RANGE WITH OVEN

MODEL VW-2 RANGE WITH WARMING OVEN AND HIGH SHELF

MODEL VS-2 RANGE WITH STORAGE COMPARTMENT

SPECIFICATIONS

TOP: Surface cooking area to be 36″ x 24″ consisting of three 12″ x 24″ sections. Each section is controlled by a high heat 250 degrees F. to 850 degrees F. thermostat which provides maximum flexibility. Plates may be used for a variety of uses from griddling to pan frying or stock pot cooking. Each section made of high quality non-warping alloy, ground and polished. Coil type heating units are supported in porcelain insulators and fitted between ribs on the bottom of the plate. Heating units are heavily insulated and completely enclosed. Full width drip trays are provided under surface area. All switches and thermostats mounted on switch panel at convenience level.

OVEN: Large oven 31½″ deep x 23½″ wide x 13″ high is finished in vitreous enamel. Oven is equipped with top and bottom heating elements, each controlled by a 3-heat switch for measured directional heat. Oven is controlled by a thermostat with a range of 150 degrees F. to 550 degrees F. Oven pilot light is mounted on upper door frame. Oven is insulated with 2″ of spun glass fibre. Drop type oven door with full width handle provides a shelf in line with oven deck. An extra strong oven rack is provided which fits in U type channels on each side of oven. Oven sides are embossed for full circulation of heat. Door is suitably insulated with 1½″ of spun glass fibre.

CONSTRUCTION: One piece stainless steel front, no cracks or seams to pick up grease etc., removable 5″ stainless steel backsplash. Units may be placed back to back for island installations. Front top of range of high grade steel chrome plated for easy cleaning and long life. Deep troughs run the full width of the range front and back to catch excess spill overs.

FINISH: Body sides and back of unit painted and baked in clear and durable Silvertone finish. Front of range and backsplash all stainless steel standard finish. Entire oven and interior of oven door of vitreous enamel. Stainless steel sides and back optional extra.

OPTIONAL UNITS: Range top may be obtained with an open compartment base (with center shelf) shown as VS-2 It may also be obtained with a warming cabinet using a 500 watt heating unit operated by an on and off switch. Unit is provided with a drop type door similar in design and finish to oven door.

VULCAN-HART MANUFACTURING CO.
3600 North Point Boulevard, Baltimore 22, Maryland

VULCAN

Heavy Duty *Electric* Ranges

DIMENSIONS AND ELECTRIC DATA

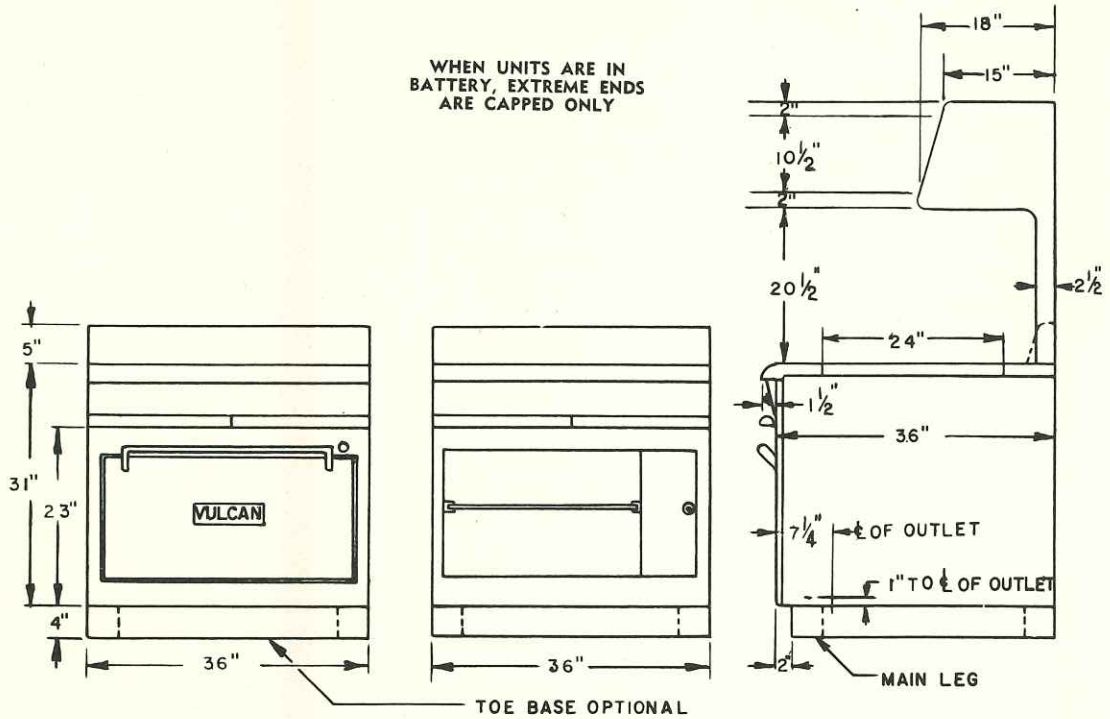

STANDARD VOLTAGES—208 VOLTS OR 240 VOLTS A.C.—SINGLE PHASE OR THREE PHASE

Dimensions & Weights

RANGE

Wide	36″
Height	31″
Height with legs	35″
Depth	36″

OVEN DIMENSIONS

Wide	23½″
Height	13″
Depth Door Closed	31½″

Approx. Weight

	SHIPPING	INSTALLED
VR-2	680	590
VS-2	560	475
VW-2	625	540

NOTE: Legs or toe base optional — No charge. Specify when ordering.

UNIT	TOTAL K.W. CONN.	3-PHASE LOADING KW PER PHASE		
		X-Y	Y-Z	X-Z
VR-2	21.7	10.	5.	6.7
VS-2	15.0	5.	5.	5.
VW-2	15.5	5.	5.	5.5

NOMINAL AMPS. PER LINE WIRE

	3-Phase						1-Phase	
	208 V.			240 V.			208 V.	240 V.
	X	Y	Z	X	Y	Z		
VR-2	67	63	46	59	51	40	104	90
VS-2	41	41	41	35	35	35	72	63
VW-2	44	41	44	38	35	38	75	65

SEE BROILER SHEET FOR RANGE & BROILER LOADING

Vulcan Hart Manufacturing Co., 3600 North Point Boulevard, Baltimore 22, Maryland

LOUISVILLE • NEW YORK • CHICAGO • LOS ANGELES • SAN FRANCISCO • BOSTON

VH—203

VULCAN Electric

HEAVY DUTY RANGES

Model VR-3 ☐ Model VW-3 ☐ Model VS-3 ☐

MODEL VR-3 RANGE WITH OVEN

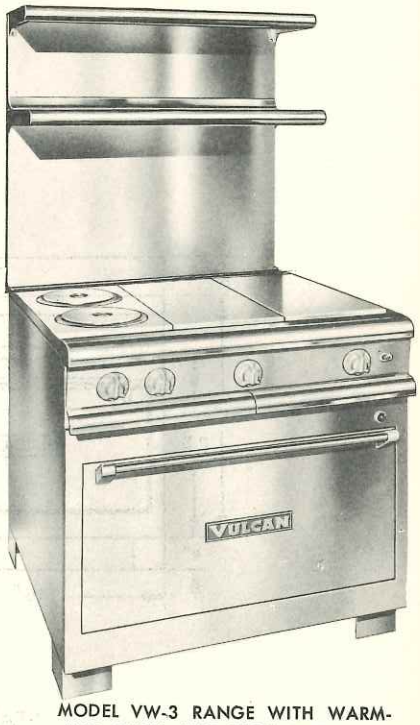

MODEL VW-3 RANGE WITH WARMING OVEN AND HIGH SHELF

MODEL VS-3 RANGE WITH STORAGE COMPARTMENT

SPECIFICATIONS

TOP: Surface cooking area to be 36″ x 24″ consisting of two Hi-Heat solid type heating units and two 12″ x 24″ hot top sections. Each hot top section controlled by a three heat switch. Range is ideal as a companion unit to other ranges in a small battery. The Hi-Heat solid type heating units are mounted in a 12″ x 24″ steel section, as an option coil tube type heating unit may be specified. Each hot plate section is made of high quality non-warping alloy ground and polished. Coil type heating units are supported in porcelain insulators and fitted between ribs on the bottom of the plate. Heating units are heavily insulated and completely enclosed. Full width drip trays are provided under surface area. All switches and thermostats mounted on a switch panel at convenience level.

OVEN: Large oven 31½″ deep x 23½″ wide x 13″ high is finished in vitreous enamel. Oven is equipped with top and bottom heating elements, each controlled by a 3-heat switch for measured directional heat. Oven is controlled by a thermostat with a range of 150 degrees F. to 550 degrees F. Oven pilot light is mounted on upper door frame. Oven is insulated with 2″ of spun glass fibre. Drop type oven door with full width handle provides a shelf in line with oven deck. An extra strong oven rack is provided which fits in U type channels on each side of oven. Oven sides are embossed for full circulation of heat. Door is suitably insulated with 1½″ of spun glass fibre.

CONSTRUCTION: One piece stainless steel front, no cracks or seams to pick up grease etc., removable 5″ stainless steel backsplash. Units may be placed back to back for island installations. Front top of range of high grade steel chrome plated for easy cleaning and long life. Deep troughs run the full width of the range front and back to catch excess spill overs.

FINISH: Body sides and back of unit painted and baked in clear and durable Silvertone finish. Front of range and backsplash all stainless steel standard finish. Entire oven and interior of oven door of vitreous enamel. Stainless steel sides and back optional extra.

OPTIONAL UNITS: Range top may be obtained with an open compartment base (with center shelf) shown as VS-3. It may also be obtained with a warming cabinet using a 500 watt heating unit operated by an on and off switch. Unit is provided with a drop type door similar in design and finish to oven door.

VULCAN-HART MANUFACTURING CO.
3600 North Point Boulevard, Baltimore 22, Maryland

VULCAN

Heavy Duty *Electric* Ranges

DIMENSIONS AND ELECTRIC DATA

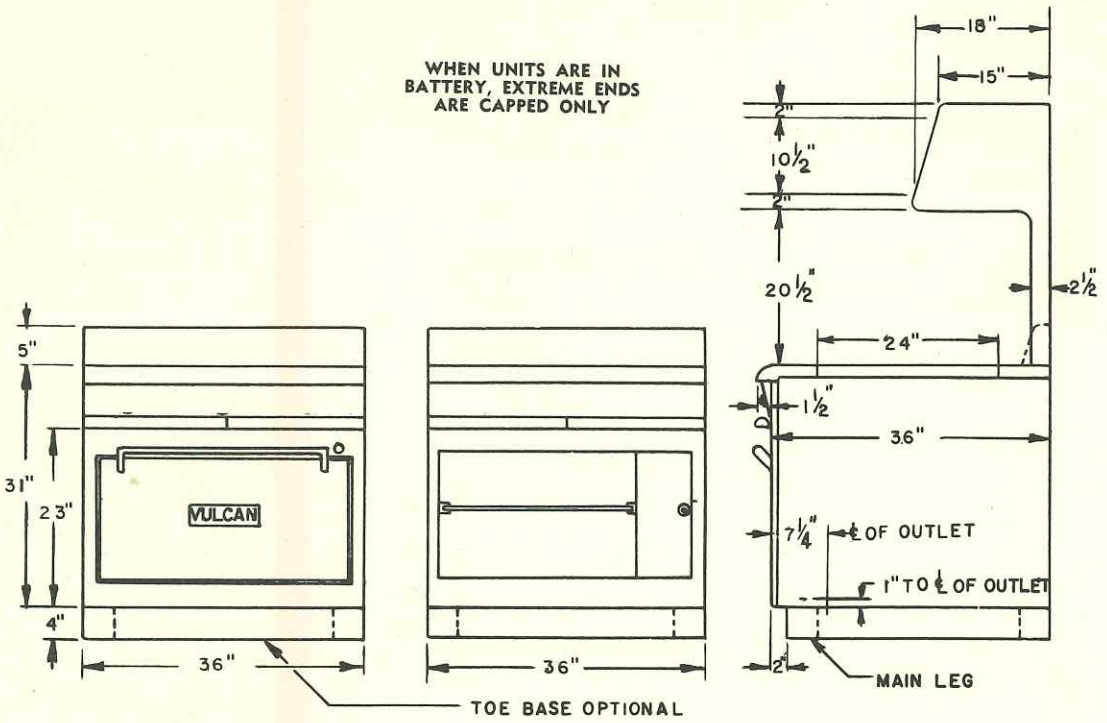

STANDARD VOLTAGES—208 VOLTS OR 240 VOLTS A.C.—SINGLE PHASE OR THREE PHASE

Dimensions & Weights

RANGE

Wide	36″
Height	31″
Height with legs	35″
Depth	36″

OVEN DIMENSIONS

Wide	23½″
Height	13″
Depth Door Closed	31½″

Approx. Weight

	SHIPPING	INSTALLED
VR-3	660	570
VS-3	540	455
VW-3	605	520

NOTE: Legs or toe base optional — No charge. Specify when ordering.

UNIT	TOTAL K.W. CONN.	3-PHASE LOADING KW PER PHASE		
		X-Y	Y-Z	X-Z
VR-3	20.7	8.6	5.	6.7
VS-3	14.0	5.	3.6	5.
VW-3	14.5	5.	3.6	5.5

NOMINAL AMPS. PER LINE WIRE

	3-Phase						1-Phase	
	208 V.			240 V.			208 V.	240 V.
	X	Y	Z	X	Y	Z		
VR-3	61	57	43	53	50	40	100	87
VS-3	41	35	35	36	31	31	67	58
W-3	53	35	38	38	31	33	70	60

SEE BROILER SHEET FOR RANGE & BROILER LOADING

Vulcan Hart Manufacturing Co., 3600 North Point Boulevard, Baltimore 22, Maryland

LOUISVILLE • NEW YORK • CHICAGO • LOS ANGELES • SAN FRANCISCO • BOSTON

VH—204

VULCAN *Electric*

HEAVY DUTY RANGES

Model VR-4 ☐ Model VW-4 ☐ Model VS-4 ☐

MODEL VR-4 RANGE WITH OVEN

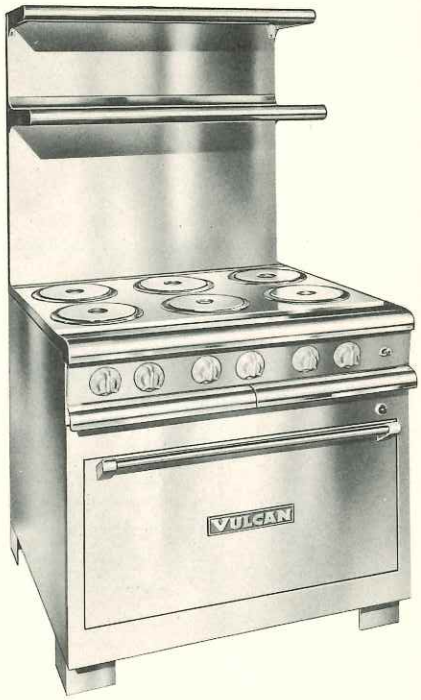

MODEL VW-4 RANGE WITH WARMING OVEN AND HIGH SHELF

MODEL VS-4 RANGE WITH STORAGE COMPARTMENT

SPECIFICATIONS

TOP: Surface cooking area to be 36″ x 24″ consisting of six separate heating Hi-Heat solid type heating units. As an option, coiled tube type heating units may be substituted. Each heating unit controlled by an independent three heat switch. Range is ideal for schools or special diet kitchens in hospitals. Full width drip trays are provided under surface area. All switches and thermostats are mounted on switch panel at convenience level.

OVEN: Large oven 31½″ deep x 23½″ wide x 13″ high is finished in vitreous enamel. Oven is equipped with top and bottom heating elements, each controlled by a 3-heat switch for measured directional heat. Oven is controlled by a thermostat with a range of 150 degrees F. to 550 degrees F. Oven pilot light is mounted on upper door frame. Oven is insulated with 2″ of spun glass fibre. Drop type oven door with full width handle provides a shelf in line with oven deck. An extra strong oven rack is provided which fits in U type channels on each side of oven. Oven sides are embossed for full circulation of heat. Door is suitably insulated with 1½″ of spun glass fibre.

CONSTRUCTION: One piece stainless steel front, no cracks or seams to pick up grease etc., removable 5″ stainless steel backsplash. Units may be placed back to back for island installations. Front top of range of high grade steel chrome plated for easy cleaning and long life. Deep troughs run the full width of the range front and back to catch excess spill overs.

FINISH: Body sides and back of unit painted and baked in clear and durable Silvertone finish. Front of range and backsplash all stainless steel standard finish. Entire oven and interior of oven door of vitreous enamel. Stainless steel sides, top and back optional extra.

OPTIONAL UNITS: Range top may be obtained with an open compartment base (with center shelf) shown as VS-4 It may also be obtained with a warming cabinet using a 500 watt heating unit operated by an on and off switch. Unit is provided with a drop type door similar in design and finish to oven door.

VULCAN-HART MANUFACTURING CO.
3600 North Point Boulevard, Baltimore 22, Maryland

VULCAN

Heavy Duty *Electric* Ranges

DIMENSIONS AND ELECTRIC DATA

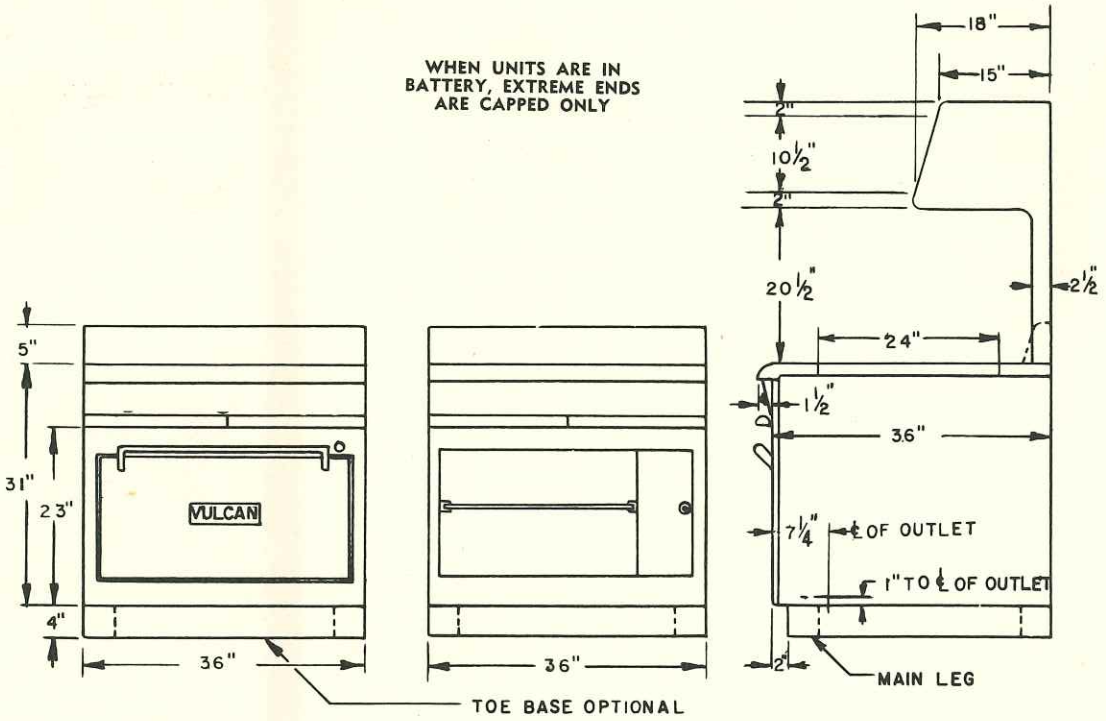

STANDARD VOLTAGES — 208 VOLTS OR 240 VOLTS A. C. — SINGLE PHASE OR THREE PHASE

Dimensions & Weights

RANGE

Wide	36″
Height	31″
Height with legs	35″
Depth	36″

OVEN DIMENSIONS

Wide	23½″
Height	13″
Depth Door Closed	31½″

Approx. Weight

	SHIPPING	INSTALLED
VR-4	600	515
VS-4	480	400
VW-4	535	440

NOTE: Legs or toe base optional — No charge. Specify when ordering.

UNIT	TOTAL K.W. CONN.	3-PHASE LOADING KW PER PHASE		
		X-Y	Y-Z	X-Z
VR-4	18.7	7.2	3.6	6.7
VS-4	12.0	3.6	3.6	3.6
VW-4	12.5	3.6	3.6	4.1

NOMINAL AMPS. PER LINE WIRE

	3-Phase						1-Phase	
	208 V.			240 V.			208 V.	240 V.
	X	Y	Z	X	Y	Z		
VR-4	55	45	40	48	39	35	90	78
VS-4	29	29	29	26	26	26	58	50
VW-4	32	29	32	28	26	28	60	52

SEE BROILER SHEET FOR RANGE & BROILER LOADING

Vulcan Hart Manufacturing Co., 3600 North Point Boulevard, Baltimore 22, Maryland

LOUISVILLE • NEW YORK • CHICAGO • LOS ANGELES • SAN FRANCISCO • BOSTON

VULCAN *Electric*

HEAVY DUTY RANGES

Model VR-5 ☐ Model VW-5 ☐ Model VS-5 ☐

MODEL VR-5 RANGE WITH OVEN

MODEL VW-5 RANGE WITH WARMING OVEN AND HIGH SHELF

MODEL VS-5 RANGE WITH STORAGE COMPARTMENT

SPECIFICATIONS

TOP: This range has a one piece fry plate top controlled by 4 independent thermostats. Sufficient heating units are provided under the ½″ steel plate to provide accurate and flexible heat under the largest cooking load possible. A raised edge is provided to prevent fat from reaching adjoining units. Top also available with cabinet base or warming oven.

OVEN: Large oven 31½″ deep x 23½″ wide x 13″ high is finished in vitreous enamel. Oven is equipped with top and bottom heating elements, each controlled by a 3-heat switch for measured directional heat. Oven is controlled by a thermostat with a range of 150 degrees F. to 550 degrees F. Oven pilot light is mounted on upper door frame. Oven is insulated with 2″ of spun glass fibre. Drop type oven door with full width handle provides a shelf in line with oven deck. An extra strong oven rack is provided which fits in U type channels on each side of oven. Oven sides are embossed for full circulation of heat. Door is suitably insulated with 1½″ of spun glass fibre.

CONSTRUCTION: One piece stainless steel front, no cracks or seams to pick up grease etc., removable 5″ stainless steel backsplash. Units may be placed back to back for island installations. Front top of range of high grade steel chrome plated for easy cleaning and long life. Deep troughs run the full width of the range front and back to catch excess spill overs.

FINISH: Body sides and back of unit painted and baked in clear and durable Silvertone finish. Front of range and backsplash all stainless steel standard finish. Entire oven and interior of oven door of vitreous enamel. Stainless steel sides and back optional extra.

OPTIONAL UNITS: Range top may be obtained with an open compartment base (with center shelf) shown as VS 5 It may also be obtained with a warming cabinet using a 500 watt heating unit operated by an on and off switch. Unit is provided with a drop type door similar in design and finish to oven door.

VULCAN-HART MANUFACTURING CO.
3600 North Point Boulevard, Baltimore 22, Maryland

VULCAN

Heavy Duty *Electric* Ranges

DIMENSIONS AND ELECTRIC DATA

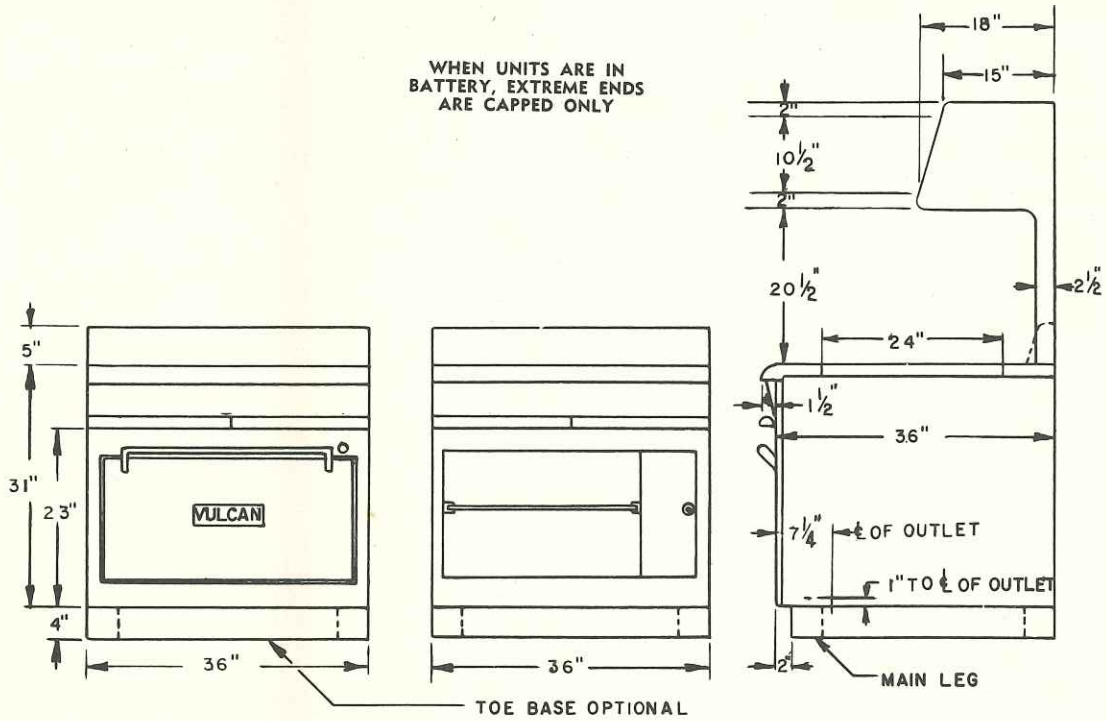

STANDARD VOLTAGES — 208 VOLTS OR 240 VOLTS A. C. — SINGLE PHASE OR THREE PHASE

Dimensions & Weights

RANGE

Wide	36″
Height	31″
Height with legs	35″
Depth	36″

OVEN DIMENSIONS

Wide	23½″
Height	13″
Depth Door Closed	31½″

Approx. Weight

	SHIPPING	INSTALLED
VR—5	600	515
VS—5	480	400
VW—S	535	440

NOTE: Legs or toe base optional. No Charge. Specify when ordering.

UNIT	TOTAL K.W. CONN.	3-PHASE LOADING KW PER PHASE		
		X-Y	Y-Z	X-Z
VR—5	22.9	5.4	8.1	9.4
VS—5	16.2	5.4	5.4	5.4
VW—5	16.7	5.4	5.4	5.9

NOMINAL AMPS. PER LINE WIRE

	3-Phase						1-Phase	
	208 V.			240 V.			208 V.	240 V.
	X	Y	Z	X	Y	Z		
VR—5	58	52	67	50	45	58	111	96
VS—5	41	41	41	36	36	36	78	68
VW—5	43	41	43	37	36	37	81	70

SEE BROILER SHEET FOR RANGE & BROILER LOADING

Vulcan Hart Manufacturing Co., 3600 North Point Boulevard, Baltimore 22, Maryland

LOUISVILLE • NEW YORK • CHICAGO • LOS ANGELES • SAN FRANCISCO • BOSTON

VH—206

VULCAN *Electric*

HEAVY DUTY RANGES

Model VR-6 ☐ Model VW-6 ☐ Model VS-6 ☐

MODEL VR-6 RANGE WITH OVEN

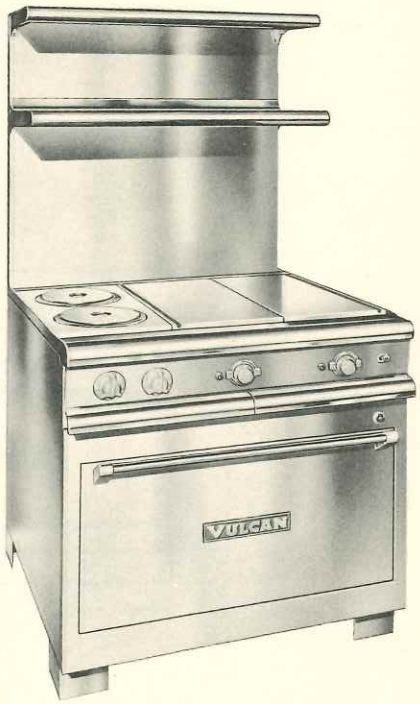

MODEL VW-6 RANGE WITH WARMING OVEN AND HIGH SHELF.

MODEL VS-6 RANGE WITH STORAGE COMPARTMENT

SPECIFICATIONS

TOP: Surface cooking area to be 36″ x 24″ consisting of two Hi-Heat solid type heating units and two 12″ x 24″ hot top sections. Each hot top section is controlled by a high heat 250 degrees F. to 850 degrees F. thermostat which provides maximum flexibility. All-purpose hot top plates may be used for a variety of uses from griddling to pan frying or stock pot cooking. Each section made of high quality non-warping alloy, ground and polished. Coil type heating units are supported in porcelain insulators and fitted between ribs on the bottom of the plate. Heating units are heavily insulated and completely enclosed. Full width drip trays are provided under surface area. All switches and thermostats mounted on switch panel at convenience level.

OVEN: Large oven 31½″ deep x 23½″ wide x 13″ high is finished in vitreous enamel. Oven is equipped with top and bottom heating elements, each controlled by a 3-heat switch for measured directional heat. Oven is controlled by a thermostat with a range of 150 degrees F. to 550 degrees F. Oven pilot is mounted on upper door frame. Oven is insulated with 2″ of spun glass fibre. Drop type oven door with full width handle provides a shelf in line with oven deck. An extra strong oven rack is provided which fits in U type channels on each side of oven. Oven sides are embossed for full circulation of heat. Door is suitably insulated with 1½″ of spun glass fibre.

CONSTRUCTION: One piece stainless steel front, no cracks or seams to pick up grease etc., removable 5″ stainless steel backsplash. Units may be placed back to back for island installations. Front top of range of high grade steel chrome plated for easy cleaning and long life. Deep troughs run the full width of the range front and back to catch excess spill overs.

FINISH: Body sides and back of unit painted and baked in clear and durable Silvertone finish. Front of range and backsplash all stainless steel standard finish. Entire oven and interior of oven door of vitreous enamel. Stainless steel sides and back optional extra.

OPTIONAL UNITS: Range top may be obtained with an open compartment base (with center shelf) shown as VS—6. It may also be obtained with a warming cabinet using a 500 watt heating unit operated by an on and off switch. Unit is provided with a drop type door similar in design and finish to oven door.

VULCAN·HART MANUFACTURING CO.
3600 North Point Boulevard, Baltimore 22, Maryland

VULCAN

Heavy Duty *Electric* Ranges

DIMENSIONS AND ELECTRIC DATA

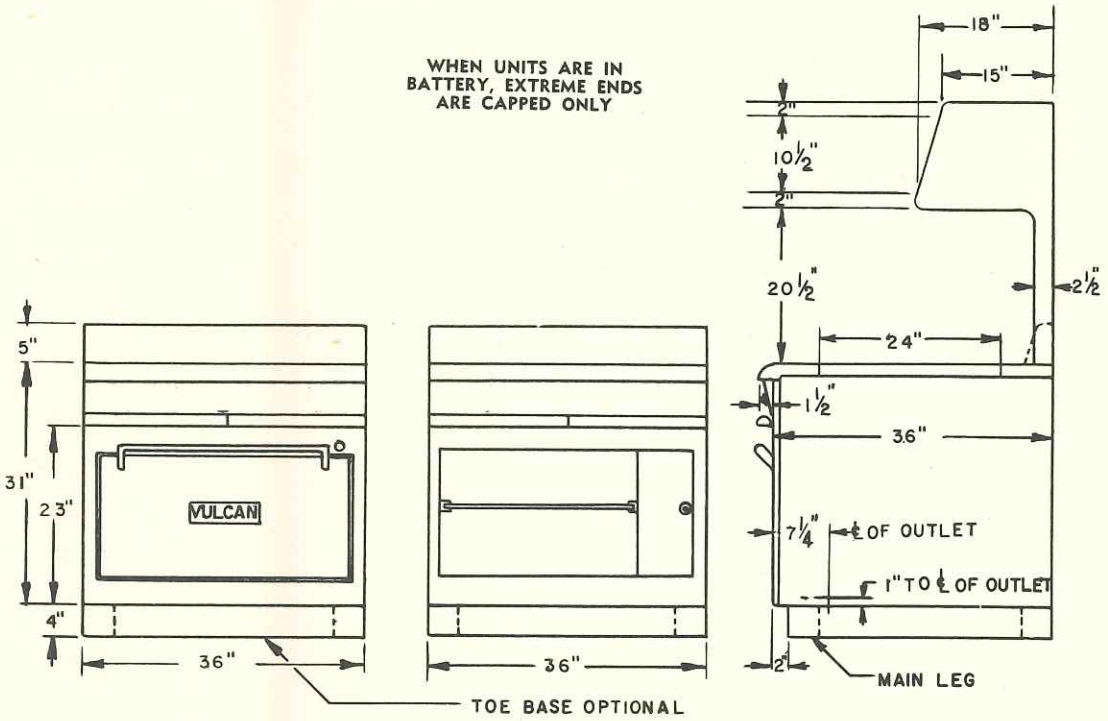

STANDARD VOLTAGES—208 VOLTS OR 240 VOLTS A.C.—SINGLE PHASE OR THREE PHASE

Dimensions & Weights

RANGE

Wide	36″
Height	31″
Height with legs	35″
Depth	36″

OVEN DIMENSIONS

Wide	23½″
Height	13″
Depth Door Closed	31½″

Approx. Weight

	SHIPPING	INSTALLED
V-6	540	455
VR-6	660	570
VW-6	605	520

NOTE: Legs or toe base optional — No charge. Specify when ordering.

UNIT	TOTAL K.W. CONN.	3-PHASE LOADING KW PER PHASE		
		X-Y	Y-Z	
VR-6	20.7	9.	5.	6.7
VS-6	14.	5.	3.6	5.
VW-6	14.5	5.	3.6	5.5

NOMINAL AMPS. PER LINE WIRE

	3-Phase						1-Phase	
	208 V.			240 V.			208 V.	240 V.
	X	Y	Z	X	Y	Z		
VR-6	61	57	43	53	50	40	100	87
VS-6	41	35	35	36	31	31	67	58
VW-6	53	35	38	38	31	33	70	60

SEE BROILER SHEET FOR RANGE & BROILER LOADING

Vulcan Hart Manufacturing Co., 3600 North Point Boulevard, Baltimore 22, Maryland

LOUISVILLE • NEW YORK • CHICAGO • LOS ANGELES • SAN FRANCISCO • BOSTON

VH—207

VULCAN *Electric*

HEAVY DUTY EXPANDO UNITS

Model VEX-1 ☐ Model VEX-2 ☐ Model VEX-3 ☐

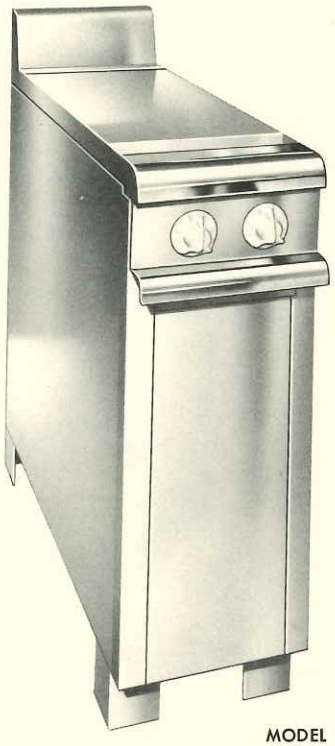

MODEL VEX-1 EXPANDO UNIT

MODEL VEX-3 EXPANDO UNIT WITH HIGH SHELF

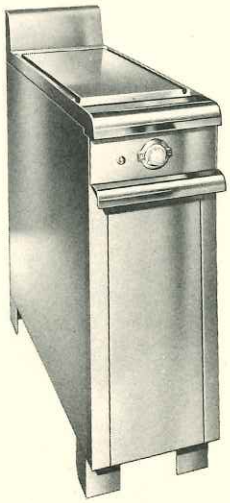

MODEL VEX-2 EXPANDO UNIT

SPECIFICATIONS

GENERAL: Extension units are 12″ wide to add extra cooking surface when placed next to a range. These units make an ideal bakers stove when installed in a bake shop.

MODEL VEX-1

Is supplied with one 12″ x 24″ hot plate having elements front and back. Each element is controlled by a three heat switch.

MODEL VEX-2

Is supplied with a polished steel cooking top and has 2 heavy duty solid type heating units or 2 Hi-Heat tubular type elements. These elements are each controlled by a three heat switch. Stainless Steel top optional extra.

MODEL VEX-3

Is supplied with one 12″ x 24″ fry plate. This plate has grease groves on each side and is controlled by a 150 degree F.-450 degree F. thermostat, and has independent pilot light.

CONSTRUCTION: Unit is 36″ deep and has a 5″ removable range matching backsplash. Legs are provided with leveling screws. Front of unit has removable panel for access to fuses, wiring, etc. Full width drip trays are provided under surface area.

FINISH: Body sides and back of Silvertone finish. Front Stainless Steel standard equipment. Front rail chrome plated steel, backsplash stainless steel. Either side or back may be obtained in Stainless Steel.

VULCAN-HART MANUFACTURING CO.
3600 North Point Boulevard, Baltimore 22, Maryland

VULCAN

Heavy Duty *Electric* Extension Units

DIMENSIONS AND ELECTRIC DATA

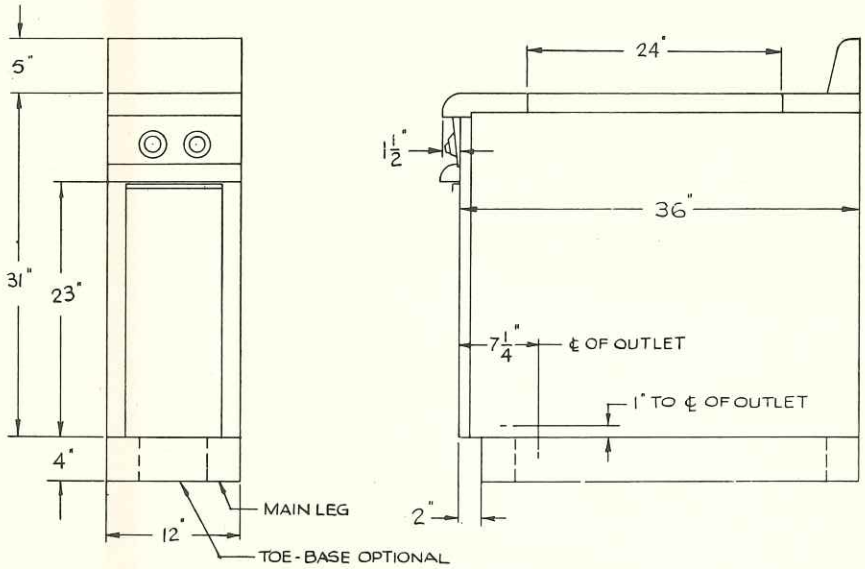

STANDARD VOLTAGES — 208 VOLTS OR 240 VOLTS A. C. — SINGLE PHASE

Dimensions & Weights

Wide	12″
Height	31″
Height With Legs	36″

Approx. Weight

	SHIPPING	INSTALLED
VEX-1	185	150
VEX-2	185	150
VEX-3	155	120

NOTE: Legs or toe base optional — No charge. Specify when ordering.

UNIT	TOTAL K.W. CONN.	AMPS PER LINE WIRE	
		20.8	24.0
VEX-1	5.	24.1	20.8
VEX-2	4.	19.2	16.7
VEX-3	5.	24.1	20.8

Vulcan Hart Manufacturing Co., 3600 North Point Boulevard, Baltimore 22, Maryland

LOUISVILLE • NEW YORK • CHICAGO • LOS ANGELES • SAN FRANCISCO • BOSTON

VH—208

VULCAN *Electric*

DOUBLE DECK HIGH SHELVES

Model VDD-12 ☐ -18 ☐-20 ☐-36 ☐-42 ☐-48 ☐

MODEL VDD-48 HIGH SHELF

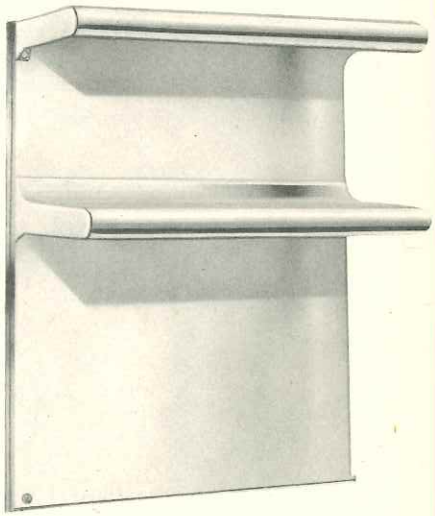

MODEL VDD-36 HIGH SHELF

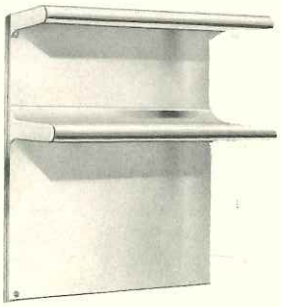

MODEL VDD-20 HIGH SHELF

SPECIFICATIONS

GENERAL: Illustrated high shelves may be used to fit over units of 12″, 20″, 36″, 42″ and 48″ wide. These sizes will fit any unit, and with combinations of sizes, shelves may extend the full length of a battery. When shelves are used for battery installation only, extreme ends of overall battery are capped. Shelves are 17″ deep and provide clearance of 20½″ over top of range. Backsplash is removable from shelf frame work.

CONSTRUCTION: Heavy support brackets are provided to prevent forward tilt. High shelves are strongly built of heavy gauge steel, securely fastened to give years of satisfactory service.

FINISH: Double deck high shelf is made with backsplash of Stainless Steel and shelves of Apollo steel are standard equipment. Shelves also available in full Stainless Steel.

VULCAN-HART MANUFACTURING CO.
3600 North Point Boulevard, Baltimore 22, Maryland

VULCAN

Double Deck High Shelves

DIMENSIONS

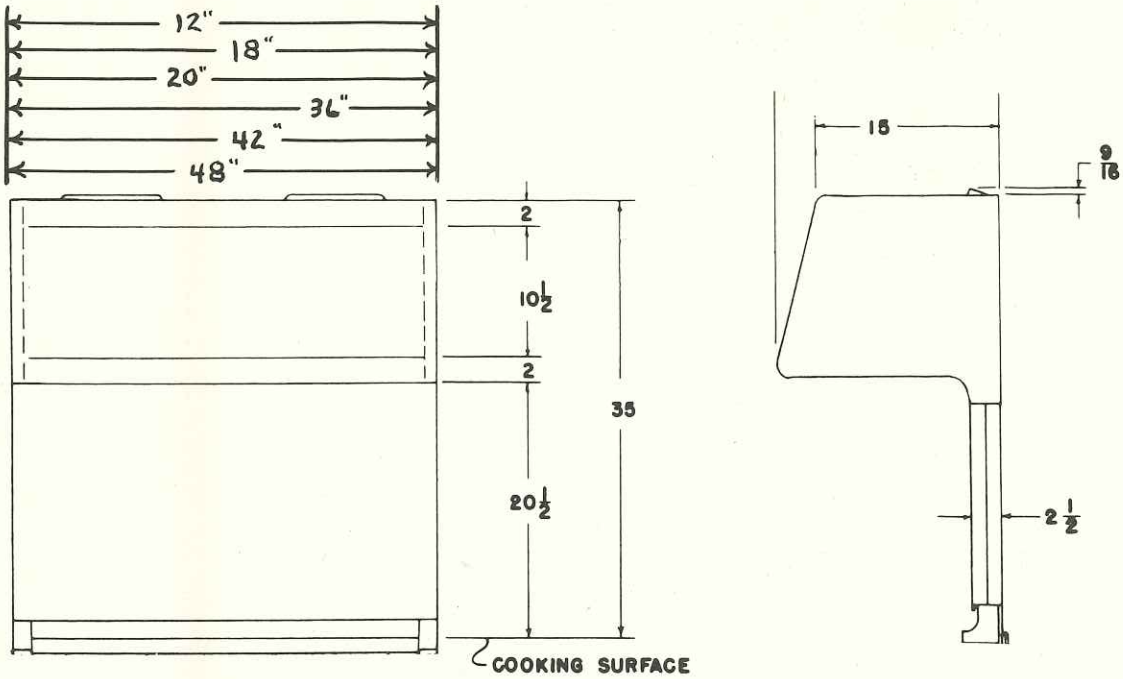

UNIT	WIDE	SHIPPING WEIGHT
VDD-12	12"	40 LBS.
VDD-18	18"	55 LBS.
VDD-20	20"	70 LBS.
VDD-36	36"	115 LBS.
VDD-42	42"	125 LBS.
VDD-48	48"	140 LBS.

Vulcan Hart Manufacturing Co., 3600 North Point Boulevard, Baltimore 22, Maryland

LOUISVILLE • NEW YORK • CHICAGO • LOS ANGELES • SAN FRANCISCO • BOSTON

VH—209

VULCAN *Electric*

HEAVY DUTY ELEVATED BROILERS

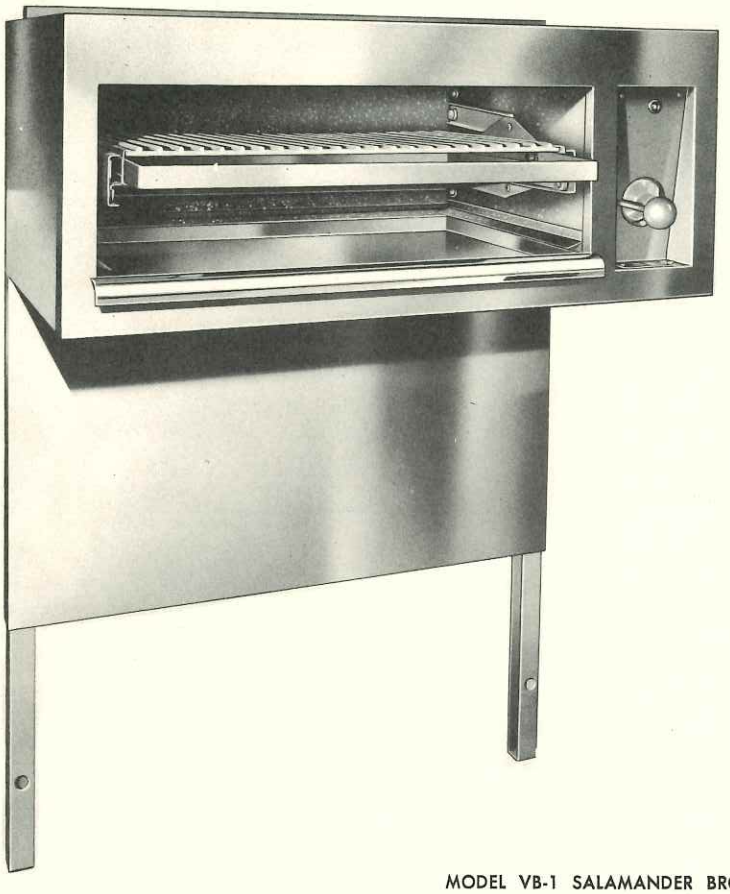

MODEL VB-1 SALAMANDER BROILER

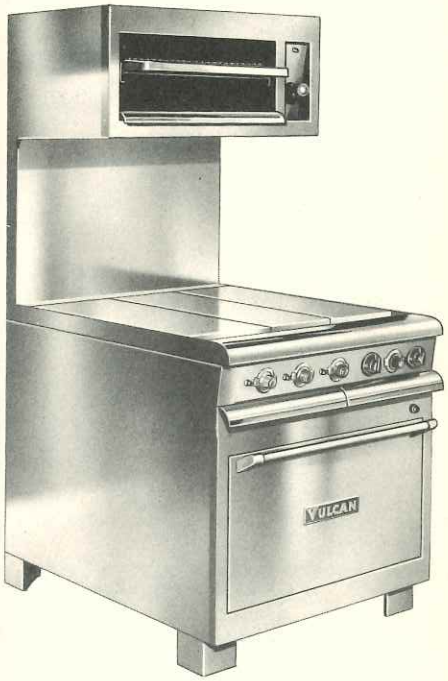

MODEL VB-1 SALAMANDER BROILER
(MOUNTED OVER RANGE)

SPECIFICATIONS

GENERAL: Unit is designed and engineered to be mounted above cooking surface of any Vulcan Electric Range. Unit is 36" wide and 19" deep. It is mounted 21" above surface of cooking top. Unit is fastened securely to body frame of range which does not allow forward tilt. Positive catch raising and lowering device allows grid to be raised or lowered 10 positions. This allows grid to be set in a variety of adjustments throughout 3½". Grid may be raised to 1½" from heating units.

HEATING UNITS: Broiler shall be equipped with two coil type heating units for fast pre-heating. Aluminized steel reflector is provided to reflect maximum heat onto grid. A reversible switch is provided to allow for variety of broiling heats. Signal light is provided to indicate when heating units are turned on.

CONSTRUCTION: Salamander body is welded and fastened to frame. Pull out rack operates on ball bearing glides. Drip shield is provided below rack for fast run off of fat out of heat zone. A stainless steel drip pan is provided out of heat zone to catch fat run off.

FINISH: Body sides and back of unit painted and baked in clear and durable Silvertone finish. Front of unit and backsplash all stainless steel standard finish. Entire interior of vitreous enamel. Stainless steel sides and back optional extra.

VULCAN

Smarter Design

Greater Flexibility

More Value

VULCAN-HART MANUFACTURING CO.
3600 North Point Boulevard, Baltimore 22, Maryland

VULCAN

Heavy Duty Salamander Broilers

DIMENSIONS AND ELECTRIC DATA

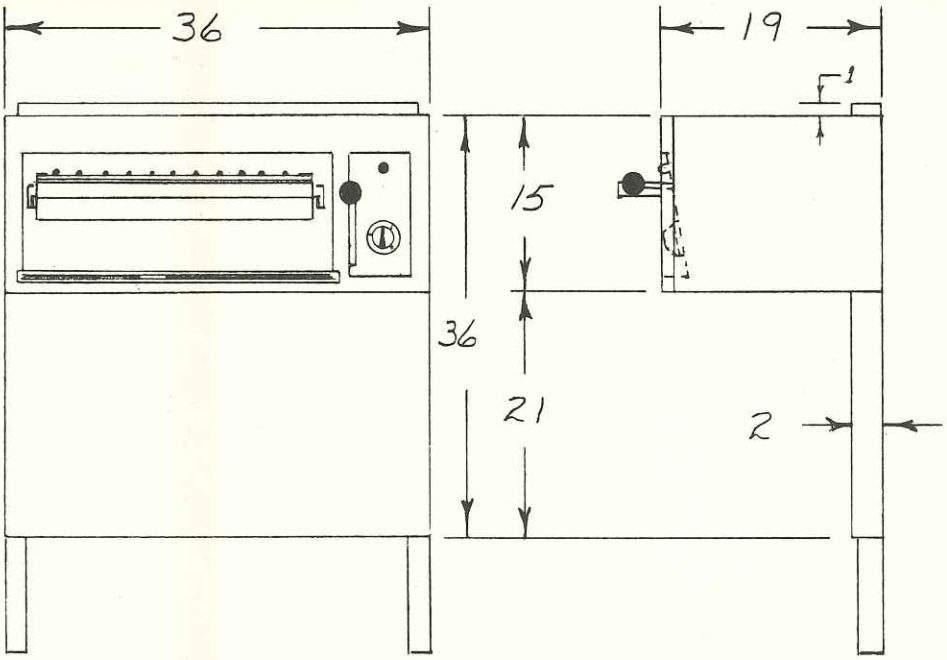

STANDARD VOLTAGES

208 VOLTS OR 240 VOLTS A.C.

SINGLE PHASE OR THREE PHASE

SHIPPING WEIGHT APPROX. 240 LBS.

UNIT	TOTAL K.W. CONN.	3-PHASE LOADING K.W. Per Phase			NOMINAL AMPERES PER LINE 3-PHASE 208V.			3-PHASE 240 V.			1-PHASE 208V.	1-PHASE 240V.
		X-Y	Y-Z	X-Z	X	Y	Z	X	Y	Z		
VB-1 BROILER	5.0	(Single Phase Only)									24.	20.5
VR-1 w/VB-1	26.7	10.0	10.0	6.7	70	84	70	61	72	61	128	111
VS-1 w/VB-1	20.0	10.0	5.0	5.0	64	64	42	55	55	36	96	83
VW-1 w/VB-1	20.5	10.0	5.0	5.5	66	64	44	57	55	39	99	86
VR-2 w/VB-1	26.7	10.0	10.0	6.7	70	84	70	61	72	61	128	111
VS-2 w/VB-1	20.0	10.0	5.0	5.0	64	64	42	55	55	36	96	83
VW-2 w/VB-1	20.5	10.0	5.0	5.5	66	64	44	57	55	39	99	86
VR-3 w/VB-1	25.7	9.0	10.0	6.7	66	79	70	57	69	61	124	107
VS-3 w/VB-1	19.0	10.0	4.0	5.0	64	60	37	55	52	33	91	79
VW-3 w/VB-1	19.5	10.0	4.0	5.5	66	60	40	57	52	35	94	81
VR-4 w/VB-1	23.7	8.0	9.0	6.7	62	71	66	53	62	57	114	99
VS-4 w/VB-1	17.0	9.0	4.0	4.0	55	55	34	48	48	29	82	71
VW-4 w/VB-1	17.5	9.0	4.0	4.5	57	56	36	50	48	31	84	73
VR-5 w/VB-1	27.9	10.4	8.1	9.4	75	71	67	65	61	58	134	116
VS-5 w/VB-1	21.2	10.4	5.4	5.4	62	62	41	54	54	36	102	88
VW-5 w/VB-1	21.7	10.4	5.4	5.9	63	62	43	55	54	37	104	90

Vulcan Hart Manufacturing Co., 3600 North Point Boulevard, Baltimore 22, Maryland

LOUISVILLE • NEW YORK • CHICAGO • LOS ANGELES • SAN FRANCISCO • BOSTON

VH—210

VULCAN *Electric*

SPREADER AND ENCLOSURE PLATES

Model VSP-6 ☐ Model VSP-12 ☐ Model VSP-18 ☐

Model VSPD-6 ☐ Model VSPD-12 ☐ Model VSPD-18 ☐

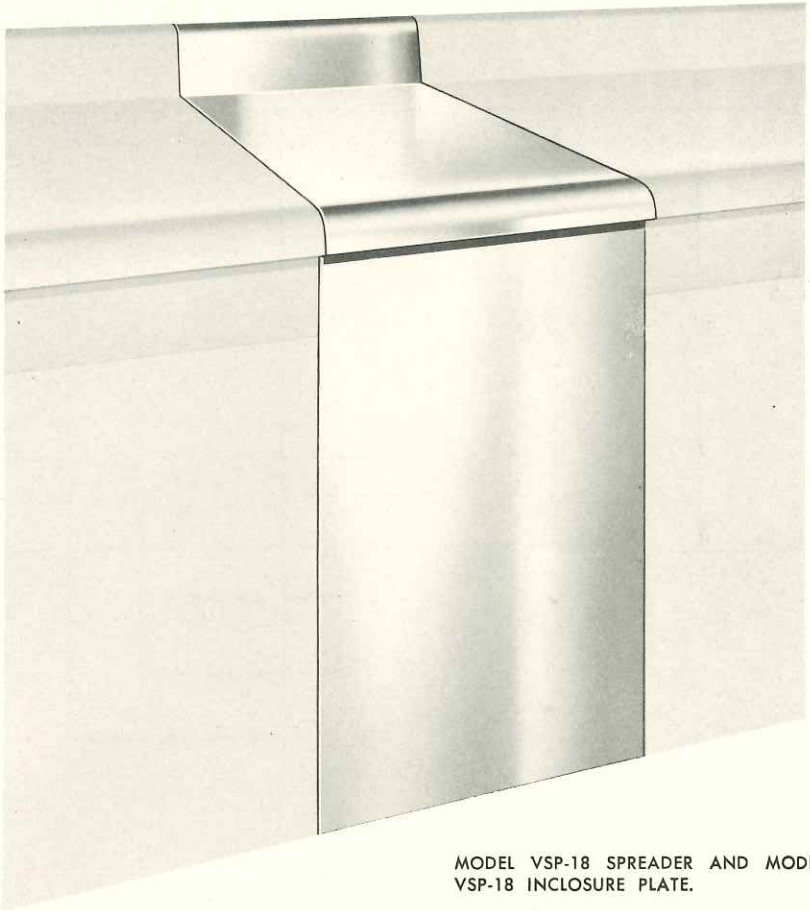

MODEL VSP-18 SPREADER AND MODEL VSP-18 INCLOSURE PLATE.

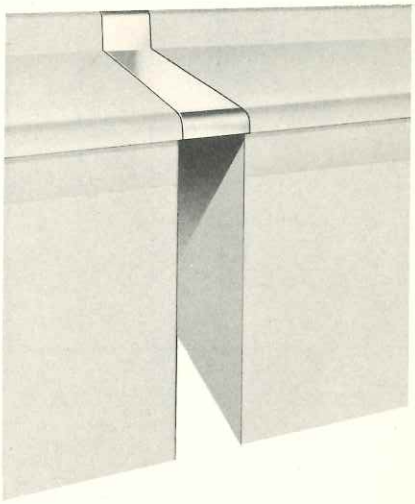

MODEL VSP-6 SPREADER PLATE

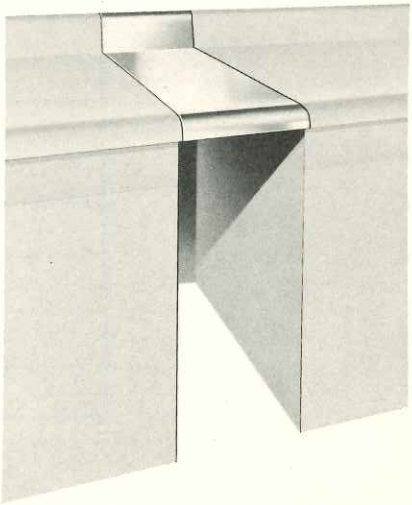

MODEL VSP-12 SPREADER PLATE

SPECIFICATIONS

GENERAL: Spreader plates and enclosure panels in 6", 12" or 18" wide to afford additional working space between ranges. A 6" spreader is recommended between fryers and ranges, or ranges and wall, or sectional ovens.

CONSTRUCTION: Spreader plates are strongly built and have range matching backsplash. They are securely fastened to adjoining units and will support the heaviest required load.

FINISH: Spreaders have highly polished steel tops matching range. Spreaders are chrome polished to match front of range. Backsplash of Stainless Steel. Enclosure panels are gleaming Stainless Steel to match range fronts and securely fastened to top and body of adjoining units. Spreaders plates may be obtained in Stainless Steel if required.

END SHELVES: End shelves shall be fabricated of steel, polished to match front and back of ranges. These may be attached to either right or left side of ranges by means of brackets. Unit to have matching backsplash to match ranges. End shelves, of at least 6", must be attached if ranges are to be installed close to a wall. This is necessary to meet Underwriters' Laboratory requirements. Shelves available in Stainless Steel optional.

VULCAN·HART MANUFACTURING CO.
3600 North Point Boulevard, Baltimore 22, Maryland

VULCAN

Heavy Duty Spreader And Enclosure Plates

DIMENSIONS

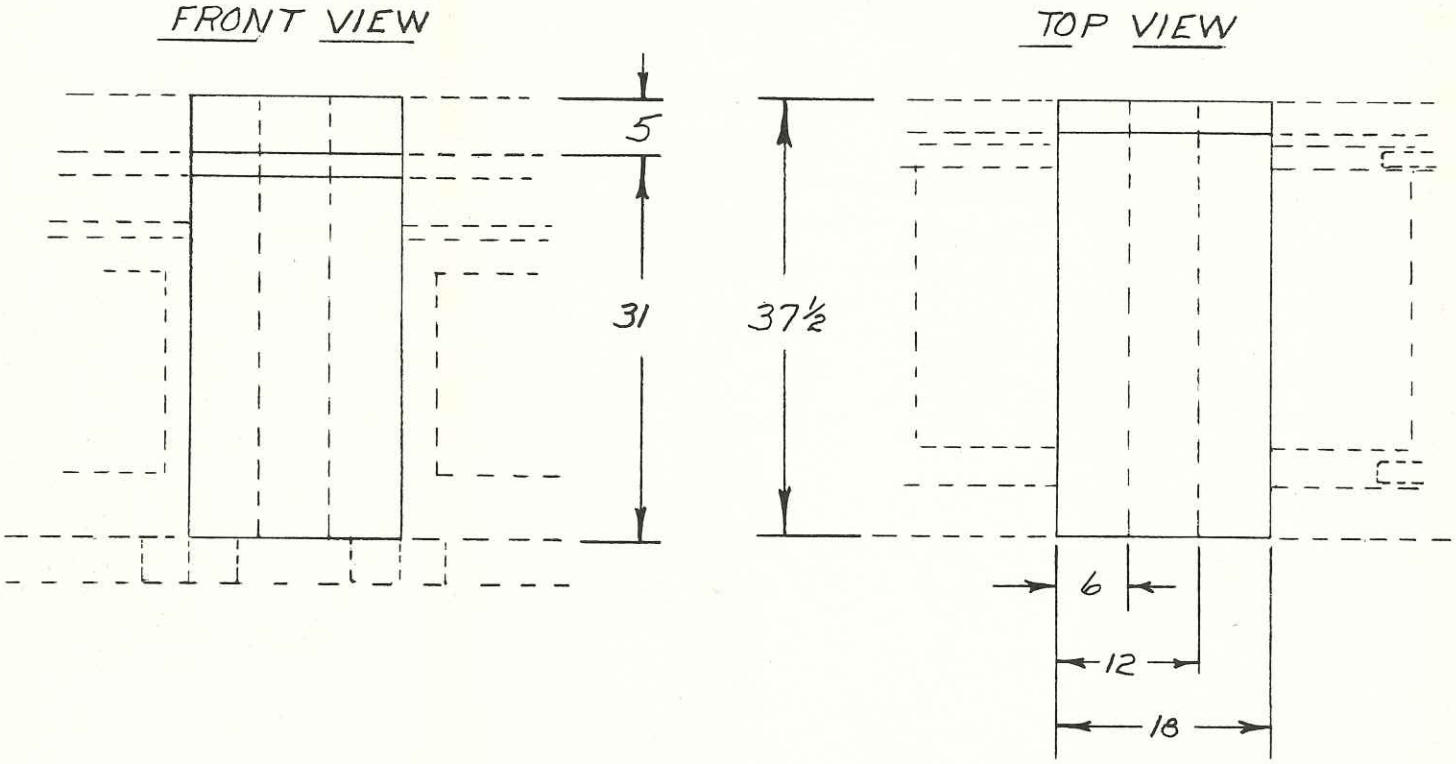

UNIT	WIDE	Approximate Shipping Weight
VSP6	6″	25
VSP12	12″	40
VSP18	18″	55
VSPD6	6″	10
VSPD12	12″	18
VSPD18	18″	25

Vulcan Hart Manufacturing Co., 3600 North Point Boulevard, Baltimore 22, Maryland

LOUISVILLE • NEW YORK • CHICAGO • LOS ANGELES • SAN FRANCISCO • BOSTON

VH—211

VULCAN *Electric*

HEAVY DUTY DEEP FAT FRYERS

Model VF-1 ☐

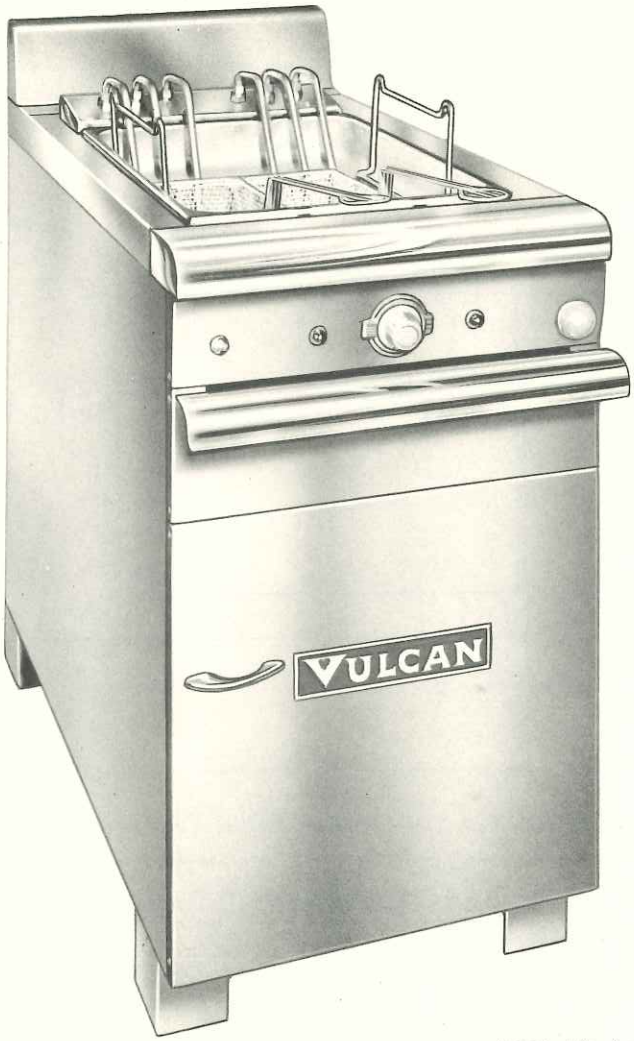

MODEL VF-1 FRYER

MODEL VF-1 FRYER WITH KETTLE REMOVED.

SPECIFICATIONS

GENERAL: The VF-1 offers the ultimate in fryer flexibility and convenience. All controls, pilot lights and switches at front of unit. They are mounted at the convenience level and out of the heat and grease zone. Heating units are engineered to provide full heating on both sides and across the bottom of kettle. An adequate cool zone is provided in the bottom of the kettle to accumulate crumbs etc. Heating units are counter-balanced and raised by means of a locking push pull handle on the front of the unit. Kettle may be drained by 1½" drain valve welded to bottom of kettle. Flush front swing type door is provided for access to bottom of fryer. Door swings to 240° to allow full access to fryer during cleaning operation. Themostat control may be set at 250°F. to allow for burning off of carbonized fat on elements. Top of unit has raised edges at all points to prevent fat overflow entering unit or flowing down sides. Grease overflow container is provided at front of unit. Unit equipped with toggle switch to turn on unit. Red signal light indicates power on. Green signal light indicates if fat in fry kettle is at pre-set temperature set by thermostat knob. Thermostat calibrated from 200 degrees F. to 400 degrees F. Basket supports attached to fat container which hold baskets in two positions.

FINISH: Entire front of unit and removeable range matching backsplash of stainless steel standard equipment. Top of unit of polished chrome plated steel. Door handle and handle on grease drawer of polished chrome plated steel. Body sides and back of unit are painted and baked in clear and durable Silvertone finish.

VULCAN

Smarter Design

Greater Flexibility

More Value

VULCAN-HART MANUFACTURING CO.
3600 North Point Boulevard, Baltimore 22, Maryland

VULCAN

Heavy Duty *Electric* Deep Fat Fryers

DIMENSIONS AND ELECTRIC DATA

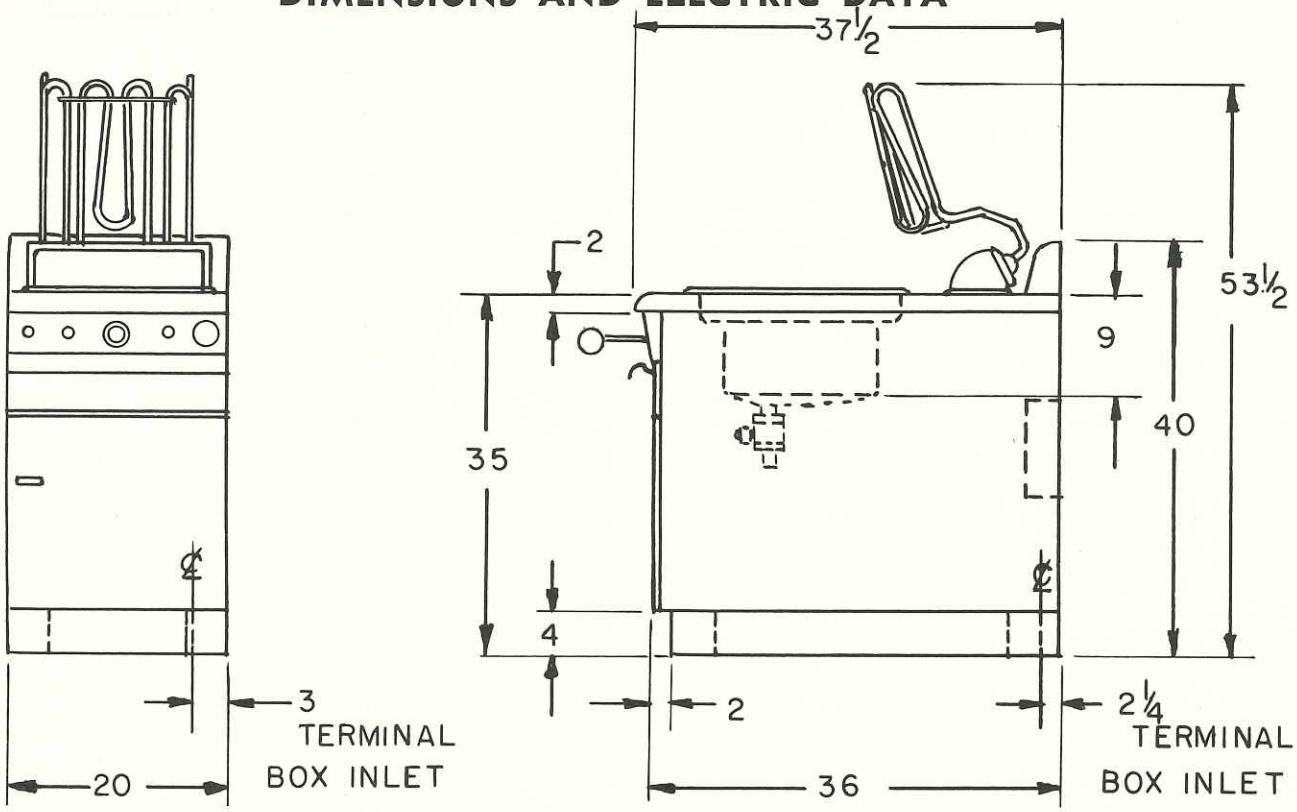

STANDARD VOLTAGES — 208 VOLTS OR 240 VOLTS A. C. — SINGLE PHASE OR THREE PHASE

FRYER

DIMENSIONS	INCHES
Height (Incl. Legs)	35″
Height - Incl. Backsplash	40″
Width	20″
Depth	36″
Legs Removable	4″
FAT CONTAINER	
Width	12½″
Depth	15⅝″
FOAM COMPARTMENT	
Width	14¾″
Depth	19¾″
FRYING CAPACITY	
	LBS. PER HR. RAW WEIGHT
POTATOES	
Raw To Finish	62
Blanch Only	80
Brown Only	275
OYSTERS	115
CHICKEN-CUT	95
CROQUETTES	235
FISH (HALIBUT)	135
VEAL CUTLETS	80

3-PHASE LOADING—KW PER PHASE

X-Y	Y-Z	X-Z
3.9	3.9	4.2

NOMINAL AMPS. PER LINE WIRE

3-Phase						1-Phase	
208 V.			240 V.			208 V.	240 V.
X	Y	Z	X	Y	Z		
34	33	34	29	28	29	57.7	52.2

FAT CAPACITY 30 LBS.

Time To Preheat To 350° F 5 Min.
Input To Maintain 350° F 700 Watts
Wattage 12 K.W.

WEIGHT APPROX.

Installed	175 Lbs.
Shipping	225 Lbs.

Vulcan Hart Manufacturing Co., 3600 North Point Boulevard, Baltimore 22, Maryland

LOUISVILLE • NEW YORK • CHICAGO • LOS ANGELES • SAN FRANCISCO • BOSTON

VH—212

VULCAN *Electric*

GENERAL PURPOSE OVENS

Model VO-02 ☐ Model VO-01 ☐ Model VO-1NB ☐

MODEL VO-02 DOUBLE SECTION OVEN

MODEL VO-01 WITH LOW LEGS

MODEL VO-01 WITH HIGH LEGS

SPECIFICATIONS

GENERAL: Unit may be supplied with or without legs. One section may become part of a range battery with a 36″ work section top. When single section is provided a 5″ stainless steel backsplash is provided to match back of other units in battery. A Salamander broiler may be mounted over a single oven section if desired.

OVENS: Large oven 31½″ deep x 23½″ wide x 13″ high is finished in vitreous enamel. Oven is equipped with top and bottom heating units each controlled by a three heat switch for measured directional heat. Oven is controlled by a thermostat with a range of 150 degrees F. to 550 degrees F. Oven pilot light is mounted on oven door frame. Oven is insulated with 2″ of spun glass fibre. Drop type oven door with cool, full width handle provides a shelf in line with oven deck. Door is capable of supporting 175 lbs. dead weight without showing signs of appreciable distortion. An extra strong oven rack is provided which fits in U type channels on each side of oven. Embossed oven walls allow for complete circulation of heat at all times. Door is suitably insulated with 1½″ of spun glass fibre. All switches and thermostats mounted at convenience level.

FINISH: Entire front to be Stainless Steel standard equipment. Body sides and back of unit are painted and baked in clear and durable Silvertone finish. 5″ backsplash when supplied is of stainless steel. Stainless Steel optional on sides or back.

VULCAN-HART MANUFACTURING CO.
3600 North Point Boulevard, Baltimore 22, Maryland

VULCAN

General Purpose *Electric* Ovens

DIMENSIONS AND ELECTRIC DATA

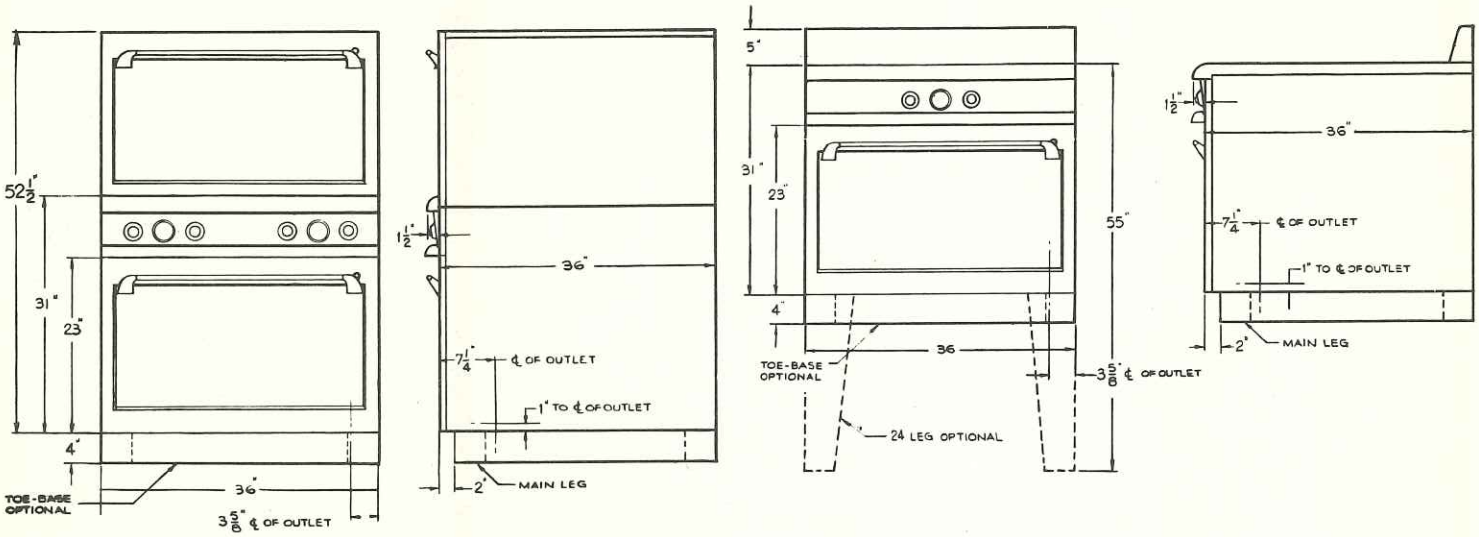

STANDARD VOLTAGES — 208 VOLTS OR 240 VOLTS A. C. — SINGLE PHASE OR THREE PHASE

Dimensions & Weights

Wide		36"
Height	4111	31"
	4112	52½"
Add for Legs		4"
Add for Long Legs		24"
Depth		36"
Oven Dimensions		
Wide		23½"
Height		13"
Depth Door Closed		31½"

Approx. Weight

	SHIPPING	INSTALLED
VO-01	485	390
VO-01 & Salamander	700	520
VO-02	855	675

NOTE: Legs or toe base optional. No charge. Specify when ordering.

UNIT	TOTAL K.W. CONN.	3-PHASE LOADING KW PER PHASE		
		X-Y	Y-Z	X-Z
VO-01	6.7	4.0	2.7	—
VO-01 & Salamander	11.7	6.7	5.	—
VO-02	13.4	4.	4.	5.4

NOMINAL AMPS. PER LINE WIRE

	3-Phase						1-Phase	
	208 V.			240 V.			208 V.	240 V.
	X	Y	Z	X	Y	Z		
VO-01	20	28	13	17	24	11	32.2	27.9
VO-01 & Salamander	32	49	24	28	42	21	56.3	48.8
VO-02	32	54	32	28	48	28	64.4	55.8

Vulcan Hart Manufacturing Co., 3600 North Point Boulevard, Baltimore 22, Maryland

LOUISVILLE • NEW YORK • CHICAGO • LOS ANGELES • SAN FRANCISCO • BOSTON

VH—213

VULCAN *Electric*

HEAVY DUTY BAKE OVENS

Model VO-444 ☐ Model VO-044 ☐ Model VO-004 ☐

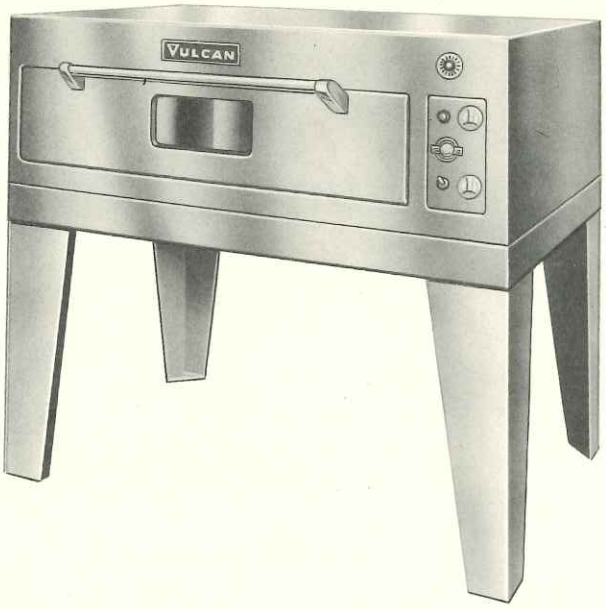

MODEL VO-004 OVEN 1 SECTION — 2 PAN

MODEL VO-444 OVEN 3 SECTION — 2 PAN

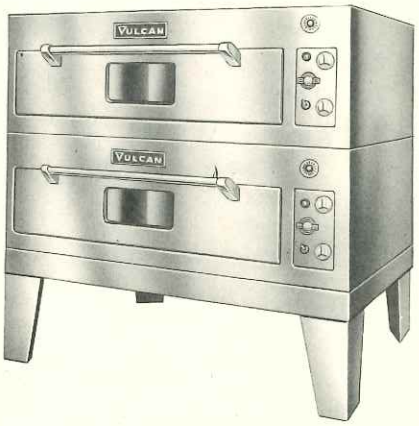

MODEL VO-044 OVEN 2 SECTION — 2 PAN

SPECIFICATIONS

GENERAL: This two, pan sectional bake oven is available in one, two or three section units and may be installed with or without legs. It may be placed next to a wall or any other oven or unit not operating at excessive heat temperature. Each section has its own deck light and switch and may be operated independently of any other unit.

INTERIOR: Bake oven has a complete interior of vitreous enamel. Deck lights are recessed in the oven wall and provide suitable illumination for all baking requirements. Oven deck is of 7/8″ one piece Core Plate to provide even heat throughout the entire deck surface. A suitable vent is provided to carry off excess moisture during baking.

INSULATION: Entire unit, sides, back, top and bottom is insulated with minimum of 4″ spun fibre, non-sagging, vermin-proof insulation. During operation it is possible to place a hand on any part of oven outer body.

OVEN DOOR: The oven door extends the full width of the oven. It has two inches of spun fibre insulation and each door is provided with a double plate observation window. This 5½″ x 11″ heat-proof glass enables the baking operation to be observed without opening the door and causing temperature drop. The interior of the door is of vitreous enamel and the exterior of stainless steel standard finish. Oven door is capable of supporting 200 lbs. without appreciable distortion.

HEATING UNITS: Tubular type heating units are suspended under the oven deck and in the top of each oven section. These units are controlled by top and bottom 3-heat reversible switches. These provide directional heat and make up 15 combinations of heat patterns for all types of baking. Quantity of heat is controlled by a 150° to 550° F. thermostat and each section has an independent pilot light.

CONTROLS: Controls are recessed in a removeable panel to right of oven doors. This panel provides access to switches, lights, wiring, fuses and door hinge assembly. The oven need never be moved from the installed position. A 60 minute long ring timer is provided for each section. The ringing of the timer acts as a reminder to remove baked goods from the oven.

FINISH: Entire front of all sections are of stainless steel as standard equipment. Body sides, top and back are painted and baked in clear and durable Silvertone Finish. Suitable legs are provided as indicated and are also finished similar to body. Stainless steel sides, legs, top or back are available as an optional extra.

A 60 minute long ring timer is provided for each section.

VULCAN-HART MANUFACTURING CO.
3600 North Point Boulevard, Baltimore 22, Maryland

VULCAN

Heavy Duty *Electric* Bake Ovens

DIMENSIONS AND ELECTRIC DATA

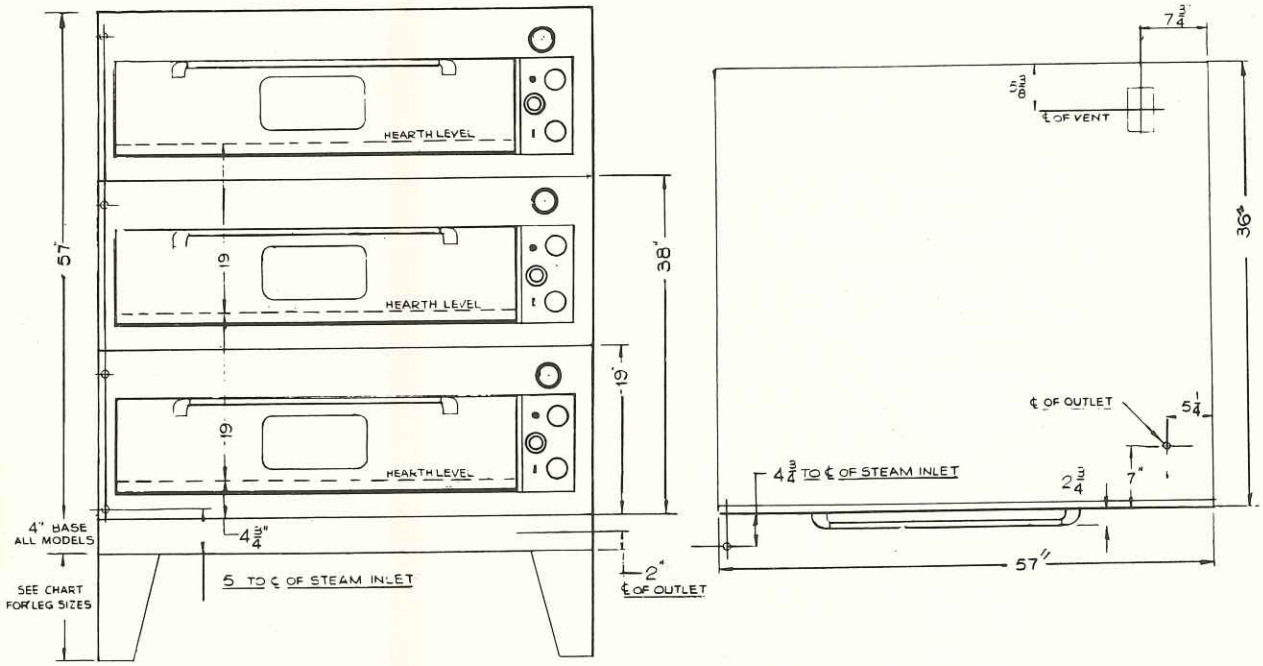

STANDARD VOLTAGES — 208 VOLTS OR 240 VOLTS A. C. — SINGLE PHASE OR THREE PHASE

Dimensions & Weights

	INTERIOR	EXTERIOR
Wide	40"	57"
Height	8"	19"
Depth	28 1/4"	36"
		LEGS
1 Section		27"
2 Section		23"
3 Section		4"

Approx. Weight

	SHIPPING	INSTALLED
VO-004	700	600
VO-044	1200	1075
VO-444	1800	1530

NOTE: Legs optional. No charge. Specify when ordering.

DECK: Core plate standard. Steel optional.

UNIT	TOTAL K.W. CONN.	3-PHASE LOADING KW PER PHASE		
		X-Y	Y-Z	X-Z
VO-004	6.2	2.6	—	3.6
VO-044	12.4	5.2	3.6	3.6
VO-444	18.6	6.2	6.2	6.2

NOMINAL AMPS. PER LINE WIRE

	3-Phase						1-Phase	
	208 V.			240 V.			208 V.	240 V.
	X	Y	Z	X	Y	Z		
VO-004	26	13	18	52	11	15	30	26
VO-044	37	37	30	32	32	26	60	52
VO-444	52	52	52	45	45	45	90	78

Vulcan Hart Manufacturing Co., 3600 North Point Boulevard, Baltimore 22, Maryland

LOUISVILLE • NEW YORK • CHICAGO • LOS ANGELES • SAN FRANCISCO • BOSTON

VH—214

VULCAN *Electric*

HEAVY DUTY BAKE OVENS

Model VO-666 ☐ Model VO-066 ☐ Model VO-006 ☐

MODEL VO-006 OVEN 1 SECTION — 4 PAN

MODEL VO-666 OVEN 3 SECTION — 4 PAN

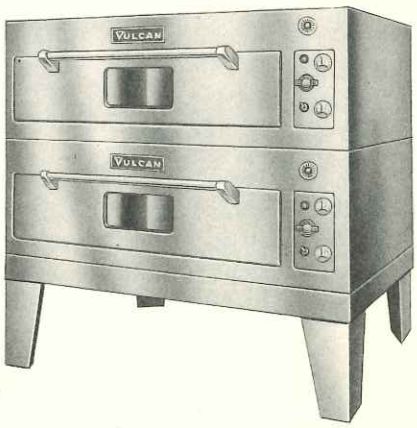

MODEL VO-066 OVEN 2 SECTION— 4 PAN

SPECIFICATIONS

GENERAL: This four, pan sectional bake oven is available in one, two or three section units and may be installed with or without legs. It may be placed next to a wall or any other oven or unit not operating at excessive heat temperature. Each section has its own deck light and switch and may be operated independently of any other unit.

INTERIOR: Bake oven has a complete interior of vitreous enamel. Deck lights are recessed in the oven wall and provide suitable illumination for all baking requirements. Oven deck is of 7/8″ one piece Core Plate to provide even heat throughout the entire deck surface. A suitable vent is provided to carry off excess moisture during baking.

INSULATION: Entire unit, sides, back, top and bottom is insulated with minimum of 4″ spun fibre, non-sagging, vermin-proof insulation. During operation it is possible to place a hand on any part of oven outer body.

OVEN DOOR: The oven door extends the full width of the oven. It has two inches of spun fibre insulation and each door is provided with a double plate observation window. This 5½″ x 11″ heat-proof glass enables the baking operation to be observed without opening the door and causing temperature drop. The interior of the door is of vitreous enamel and the exterior of stainless steel standard finish. Oven door is capable of supporting 200 lbs. without appreciable distortion.

HEATING UNITS: Tubular type heating units are suspended under the oven deck and in the top of each oven section. These units are controlled by top and bottom 3-heat reversible switches. These provide directional heat and make up 15 combinations of heat patterns for all types of baking. Quantity of heat is controlled by a 150° to 550° F. thermostat and each section has an independent pilot light.

CONTROLS: Controls are recessed in a removeable panel to right of oven doors. This panel provides access to switches, lights, wiring, fuses and door hinge assembly. The oven need never be moved from the installed position. A 60 minute long ring timer is provided for each section. The ringing of the timer acts as a reminder to remove baked goods from the oven.

FINISH: Entire front of all sections are of stainless steel as standard equipment. Body sides, top and back are painted and baked in clear and durable Silvertone Finish. Suitable legs are provided as indicated and are also finished similar to body. Stainless steel sides, legs, top or back are available as an optional extra.

A 60 minute long ring timer is provided for each section.

VULCAN-HART MANUFACTURING CO.
3600 North Point Boulevard, Baltimore 22, Maryland

VULCAN

Heavy Duty *Electric* Bake Ovens

DIMENSIONS AND ELECTRIC DATA

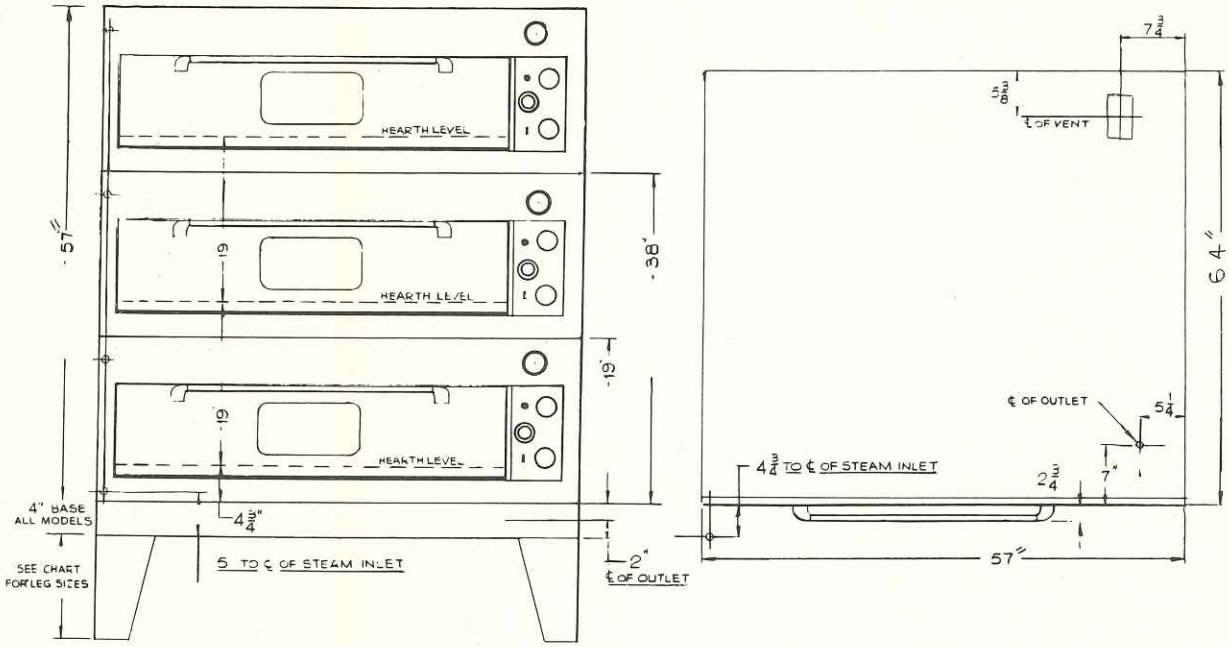

Dimensions & Weights

	INTERIOR	EXTERIOR
Wide	40"	57"
Height	8"	19"
Depth	56 ¼"	64"
		LEGS
1 Section		27"
2 Section		23"
3 Section		4"

Approx. Weight

	SHIPPING	INSTALLED
VO-006	1225	1115
VO-066	2100	1980
VO-666	3000	2750

NOTE: Legs optional. No charge. Specify when ordering.

DECK: Core plate standard. Steel optional.

STANDARD VOLTAGES — 208 VOLTS OR 240 VOLTS A. C. — SINGLE PHASE OR THREE PHASE

UNIT	TOTAL K.W. CONN.	3-PHASE LOADING KW PER PHASE		
		X-Y	Y-Z	X-Z
VO-006	7.5	2.7	4.8	—
VO-066	15.0	4.8	4.8	5.4
VO-666	22.5	7.5	7.5	7.5

NOMINAL AMPS. PER LINE WIRE

	3-Phase						1-Phase	
	208 V.			240 V.			208 V.	240 V.
	X	Y	Z	X	Y	Z		
VO-006	24	32	14	20	28	11	37	32.5
VO-066	43	40	43	36	30	36	74	65
VO-666	61	61	61	53	53	53	111	97.5

Vulcan Hart Manufacturing Co., 3600 North Point Boulevard, Baltimore 22, Maryland

LOUISVILLE • NEW YORK • CHICAGO • LOS ANGELES • SAN FRANCISCO • BOSTON

VH—215

VULCAN *Electric*

HEAVY DUTY BAKE OVENS

Model VO-777 ☐ Model VO-077 ☐ Model VO-007 ☐

MODEL VO-007 OVEN 1 SECTION — 6 PAN

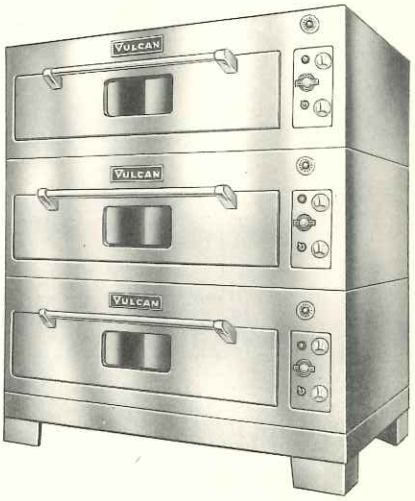

MODEL VO-777 OVEN 3 SECTION — 6 PAN

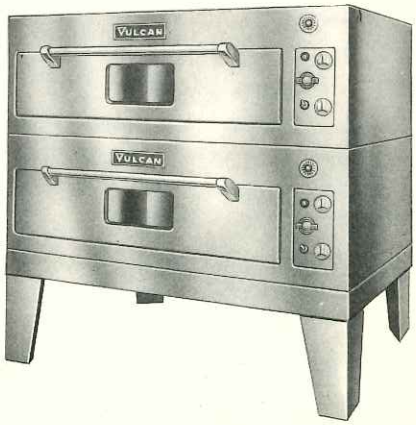

MODEL VO-077 OVEN 2 SECTION — 6 PAN

SPECIFICATIONS

GENERAL: This six pan sectional bake oven is available in one, two or three section units and may be installed with or without legs. It may be placed next to a wall or any other oven or unit not operating at excessive heat temperature. Each section has its own deck light and switch and may be operated independently of any other unit.

INTERIOR: Bake oven has a complete interior of vitreous enamel. Deck lights are recessed in the oven wall and provide suitable illumination for all baking requirements. Oven deck is of 7/8″ one piece Core Plate to provide even heat throughout the entire deck surface. A suitable vent is provided to carry off excess moisture during baking.

INSULATION: Entire unit, sides, back, top and bottom is insulated with minimum of 4″ spun fibre, non-sagging, vermin-proof insulation. During operation it is possible to place a hand on any part of oven outer body.

OVEN DOOR: The oven door extends the full width of the oven. It has two inches of spun fibre insulation and each door is provided with a double plate observation window. This 5½″ x 11″ heat-proof glass enables the baking operation to be observed without opening the door and causing temperature drop. The interior of the door is of vitreous enamel and the exterior of stainless steel standard finish. Oven door is capable of supporting 200 lbs. without appreciable distortion.

HEATING UNITS: Tubular type heating units are suspended under the oven deck and in the top of each oven section. These units are controlled by top and bottom 3-heat reversible switches. These provide directional heat and make up 15 combinations of heat patterns for all types of baking. Quantity of heat is controlled by a 150° to 550° F. thermostat and each section has an independent pilot light.

CONTROLS: Controls are recessed in a removeable panel to right of oven doors. This panel provides access to switches, lights, wiring, fuses and door hinge assembly. The oven need never be moved from the installed position. A 60 minute long ring timer is provided for each section. The ringing of the timer acts as a reminder to remove baked goods from the oven.

FINISH: Entire front of all sections are of stainless steel as standard equipment. Body sides, top and back are painted and baked in clear and durable Silvertone Finish. Suitable legs are provided as indicated and are also finished similar to body. Stainless steel sides, legs, top or back are available as an optional extra.

A 60 minute long ring timer is provided for each section.

VULCAN-HART MANUFACTURING CO.
3600 North Point Boulevard, Baltimore 22, Maryland

VULCAN

Heavy Duty *Electric* Bake Ovens

DIMENSIONS AND ELECTRIC DATA

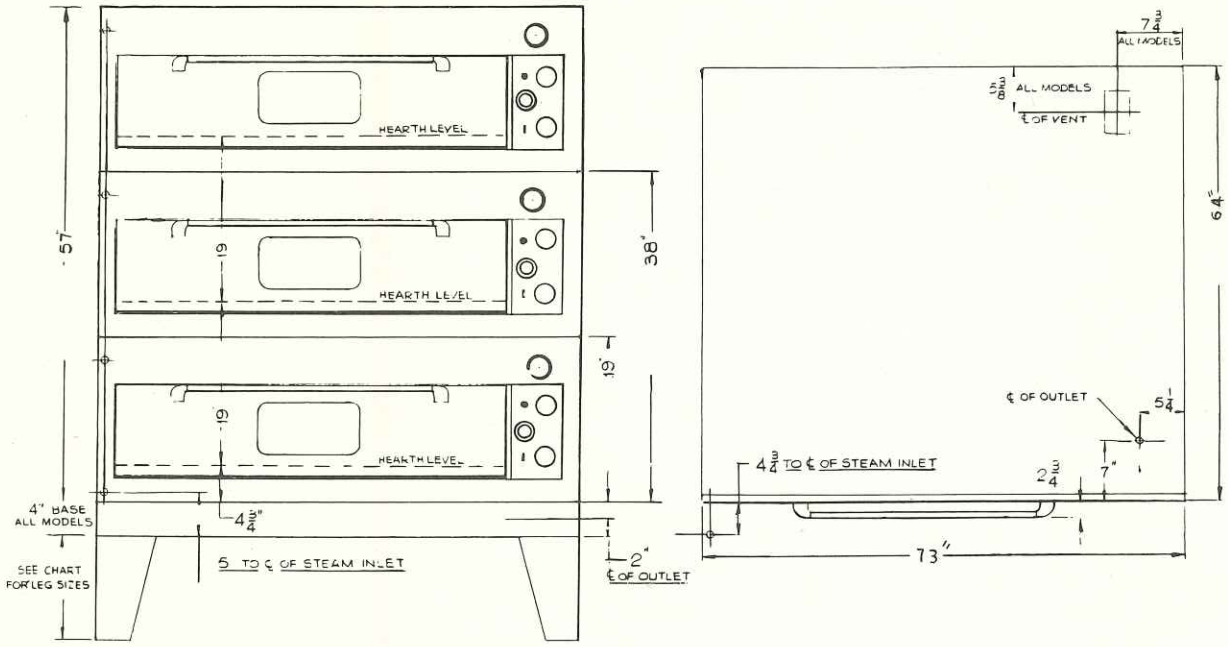

Dimensions & Weights

	INTERIOR	EXTERIOR
Wide	56″	73″
Height	8″	19″
Depth	56 ¼″	64″
		LEGS
1 Section		27″
2 Section		23″
3 Section		4″

Approx. Weight

	SHIPPING	INSTALLED
VO-007	1510	1360
VO-077	2600	2415
VO-777	3700	3300

NOTE: Legs optional. No charge. Specify when ordering.

DECK: Core plate standard. Steel optional.

STANDARD VOLTAGES — 208 VOLTS OR 240 VOLTS A. C. — SINGLE PHASE OR THREE PHASE

UNIT	TOTAL K.W. CONN.	3-PHASE LOADING KW PER PHASE		
		X-Y	Y-Z	X-Z
VO-007	10.5	4.5	6.0	—
VO-077	21.0	6.0	6.0	9.0
VO-777	31.5	10.5	10.5	10.5

NOMINAL AMPS. PER LINE WIRE

	3-Phase						1-Phase	
	208 V.			240 V.			208 V.	240 V.
	X	Y	Z	X	Y	Z		
VO-007	22	39	29	19	34	25	50.5	43.8
VO-077	62	48	62	54	43	54	101.0	87.6
VO-777	86	86	86	74	74	74	151.5	131.4

Vulcan Hart Manufacturing Co., 3600 North Point Boulevard, Baltimore 22, Maryland

LOUISVILLE • NEW YORK • CHICAGO • LOS ANGELES • SAN FRANCISCO • BOSTON

VH—216

VULCAN *Electric*

HEAVY DUTY ROAST OVENS

Model VO-888 ☐ Model VO-088 ☐ Model VO-008 ☐

MODEL VO-008 OVEN 1 SECTION — 2 PAN

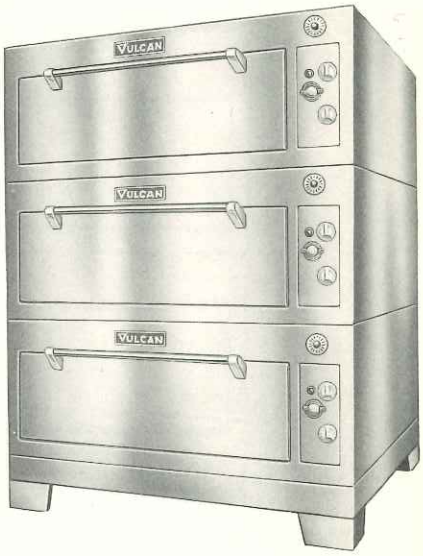

MODEL VO-888 OVEN 3 SECTION — 2 PAN

MODEL VO-088 OVEN 2 SECTION — 2 PAN

SPECIFICATIONS

GENERAL: This two pan sectional roast oven is available in one, two, or three section units and may be installed with or without legs. It may be placed next to wall or any other oven or unit not operating at excessive heat temperature.

INTERIOR: Roast oven has a complete interior of vitreous enamel. Oven deck is of one piece Air-Cushion steel plate to provide even heat throughout the entire deck surface. A suitable vent is provided to carry off excess moisture during roasting. A suitable strong rack is provided which fits into channels on each side of each Roast section.

INSULATION: Entire unit, sides, back, top and bottom is insulated with a minimum of 4″ spun fibre, non-sagging, vermin proof insulation. During operation it is possible to place a hand on any part of oven outer body.

OVEN DOOR: The oven door extends the full width of the oven. It has two inches of spun fibre insulation. The interior of the door is of vitreous enamel and the exterior of Stainless Steel standard finish. The oven door is capable of supporting 200 lbs. without appreciable distortion.

HEATING UNITS: Tubular type heating units are suspended under the oven deck and in the top of each oven section. These units are controlled by top and bottom 3-heat reversible switches. These provide directional heat and form a combination of 5-heat patterns. Quantity of heat is controlled by a 150° F. to 550° F. thermostat and each section has an independent pilot light.

CONTROLS: Controls are recessed in a removeable panel to right of oven doors. This panel provides access to switches, lights, wiring, fuses and door hinge assembly. The oven need never be moved from the installed position.

FINISH: Entire front of all sections are of Stainless Steel as standard equipment. Body sides, top and back are painted and baked on clear and durable Silvertone finish. Suitable legs are provided as indicated and are finished similar to body. Stainless Steel sides, top and back are available as an optional extra.

A 60 minute long ring timer is provided for each section.

VULCAN-HART MANUFACTURING CO.
3600 North Point Boulevard, Baltimore 22, Maryland

VULCAN

Sectional *Electric* Roast Ovens

DIMENSIONS AND ELECTRIC DATA

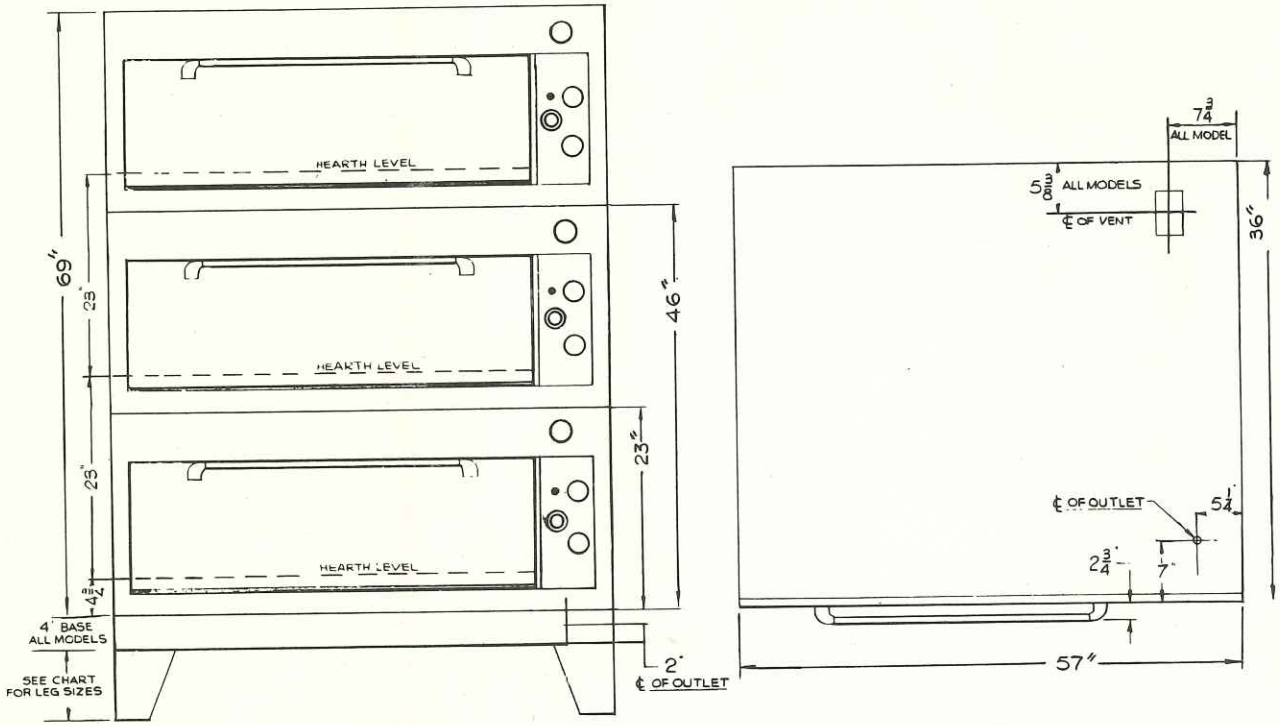

Dimensions & Weights

	INTERIOR	EXTERIOR
Wide	40"	57"
Height	12"	23"
Depth	28 1/4"	36"
		LEGS
1 Section		23"
2 Section		16"
3 Section		4"

Approx. Weight

	SHIPPING	INSTALLED
VO-008	780	670
VO-088	1350	1160
VO-888	1900	1640

NOTE: Legs optional. No charge. Specify when ordering.

DECK: Steel Standard Core Plate Optional

STANDARD VOLTAGES—208 OR 240 VOLTS A.C.—SINGLE PHASE OR THREE PHASE

UNIT	TOTAL K.W. CONN.	3-PHASE LOADING KW PER PHASE		
		X-Y	Y-Z	X-Z
VO-008	6.2	2.6		3.6
VO-088	12.4	5.2	3.6	3.6
VO-888	18.6	6.2	6.2	6.2

NOMINAL AMPS. PER LINE WIRE

	3-Phase						1-Phase	
	208 V.			240 V.			208 V.	240 V.
	X	Y	Z	X	Y	Z		
VO-008	26	26	17	25	11	15	30	26
VO-088	37	37	36	32	32	26	60	52
VO-888	52	25	52	45	45	45	90	78

Vulcan Hart Manufacturing Co., 3600 North Point Boulevard, Baltimore 22, Maryland

LOUISVILLE • NEW YORK • CHICAGO • LOS ANGELES • SAN FRANCISCO • BOSTON

VH—217

VULCAN *Electric*

COMBINATION BAKE AND ROAST OVENS

Model VO-448 ☐ Model VO-048 ☐ Model VO-488 ☐

MODEL VO-048 COMBINATION OVEN—1 BAKE—1 ROAST SECTION

MODEL VO-488 COMBINATION OVEN—1 BAKE—2 ROAST SECTIONS

MODEL VO-448 COMBINATION OVEN—2 BAKE—1 ROAST SECTION

SPECIFICATIONS

GENERAL: These two pan ovens are available in one or more units of bake and roast sections and may be installed with or without legs. It may be placed next to a wall or any other oven or unit not operating at excessive heat temperature.

INTERIOR: Complete interior of each section of vitreous enamel finish. Oven deck in roast sections of Air-Cushion steel plate. Core Plate optional. Oven deck of bake sections of 7/8″ Core Plate. A suitable vent is provided to carry off excess moisture during baking or roasting operations. A suitable strong rack is provided, which fits into channels on each side of each roast section.

INSULATION: Entire unit, sides, back, top and bottom is insulated with a minimum of 4″ spun fibre, non-sagging, vermin proof insulation. During operation it is possible to place a hand on any part of oven outer body.

OVEN DOOR: The oven door extends the full width of the oven. It has two inches of spun fibre insulation. The interior of the door is of vitreous enamel and the exterior of stainless steel. The oven door is capable of supporting 200 lbs. without distortion. Bake oven doors have an observation window.

HEATING UNITS: Tubular type heating units are suspended under the oven deck and in the top of each oven section. These units are controlled by top and bottom 3-heat reversible switches. These provide directional heat and form a combination of 15-heat patterns. Quantity of heat is controlled by a 150° F. to 550° F. thermostat and each has an independent pilot light.

CONTROLS: Controls are recessed in a removable panel to right of oven doors. This panel provides access to switches, lights, wiring, fuses and door hinge assembly. The oven need never be moved from the installed position. A 60 minute long ring timer is provided on each section. The ringing of this timer acts as a reminder to remove baked products from the oven.

FINISH: Entire front of all sections are of Stainless Steel as standard equipment. Body sides, top and back are painted and baked in clear and durable Silvertone Finish. Suitable legs are provided as indicated and are finished similar to body finish. Stainless Steel sides, top or back are available as an optional extra. The front sections of Stainless Steel are standard equipment.

A 60 minute long ring timer is provided for each section.

VULCAN-HART MANUFACTURING CO.
3600 North Point Boulevard, Baltimore 22, Maryland

VULCAN

Electric

Combination Bake And Roast Ovens

DIMENSIONS AND ELECTRIC DATA

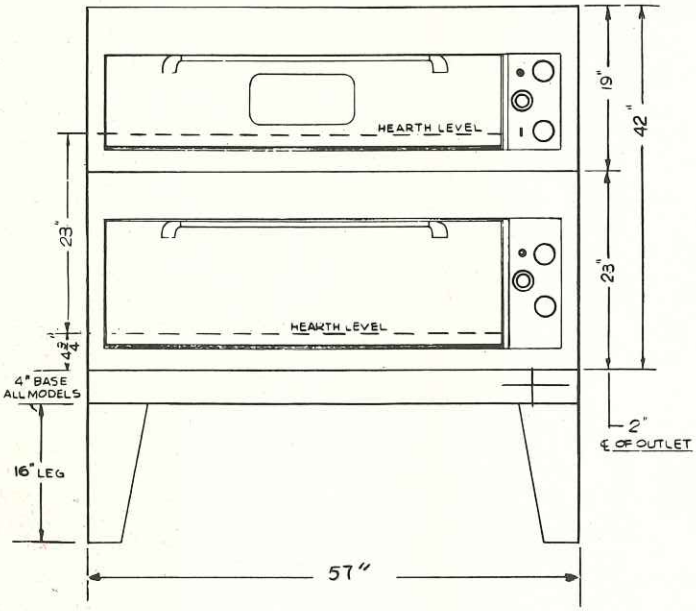

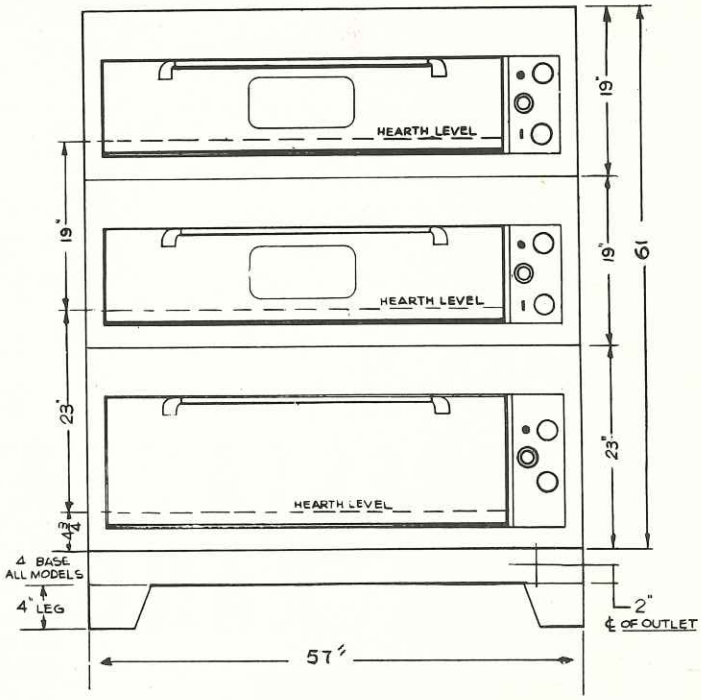

STANDARD VOLTAGES — 208 VOLTS OR 240 VOLTS A. C. — SINGLE PHASE OR THREE PHASE

Dimensions & Weights

	INTERIOR	EXTERIOR
Wide	40″	57″
Height	8″-12″	19″-23″
Depth	28 ¼″	36″
		LEGS
2 Sections		16″
3 Sections		4″

Approx. Weight

	SHIPPING	INSTALLED
VO-048	1325	1125
VO-448	1670	1415
VO-488	1760	1500

NOTE: Legs optional. No charge. Specify when ordering.

DECK: Bake Core Plate
Roast Steel

UNIT	TOTAL K.W. CONN.	3-PHASE LOADING KW PER PHASE		
		X-Y	Y-Z	X-Z
VO-048	12.4	5.2	3.6	3.6
VO-448	18.6	6.2	6.2	6.2
VO-488	18.6	6.2	6.2	6.2

NOMINAL AMPS. PER LINE WIRE

	3-Phase						1-Phase	
	208 V.			240 V.			208 V.	240 V.
	X	Y	Z	X	Y	Z		
VO-048	37	37	36	32	32	26	60	52
VO-448	52	52	52	45	45	45	90	78
VO-488	52	52	52	45	45	45	90	78

Vulcan Hart Manufacturing Co., 3600 North Point Boulevard, Baltimore 22, Maryland

LOUISVILLE • NEW YORK • CHICAGO • LOS ANGELES • SAN FRANCISCO • BOSTON

VULCAN

Electric

RESTAURANT RANGE

VULCAN • HART MANUFACTURING CO., Baltimore • Louisville

new

VULCAN AUTOMATIC ELECTRIC RESTAURANT RANGE

AUTOMATIC, EFFICIENT AND DEPENDABLE
CUSTOM ENGINEERED TO YOUR EXACT REQUIREMENTS

Completely automatic and with many new and exclusive features

LARGE CAPACITY OVENS

Two large 26″ x 22½″ ovens permit baking and roasting at one time. Each high speed 5000 Watt oven is controlled by a thermostat and has an individual pilot light to indicate that the correct pre-set temperature is being maintained. Ovens are insulated with vermin proof high grade non-sagging spun fiber insulation. Removable vitreous enamel oven deck for ease of cleaning. Oven interiors are vitreous enamel and have two rack guides for adjusting height of oven rack.

SURFACE COOKING

Six Hi-Heat elements provide complete flexibility. Two 8″ High Speed units for fast bulk cooking. Two 6″ High Speed units for small quantity food preparation. Two 8″ Heavy Duty solid top elements for long sustained cooking. All elements have multiple heat switches from simmer heat to full heat. Red signal light indicates if any element is turned on. Units are mounted on a heavy 14 gauge steel top with vitreous enamel finish for long life and ease of cleaning. A removable drip pan is provided under all surface units to catch spillage and boil overs.

FLEXIBLE HEAT GRIDDLE

The large 24″ x 24″ special alloy steel griddle has two adjustable 200° to 450° thermostats. Accurate thermostatic heat may be obtained on either right or left side of griddle. Both thermostats may be set at one temperature to provide even heat on entire griddle surface. Griddle is made of highly polished steel plate with a 7/8″ raised edge on three sides. Outer edge is turned down to allow fat run off etc. into a large full length slide out grease container. Griddle has two pilot lights to indicate if griddle is at pre-set temperature.

RADIANT HEAT BROILER

The Hi-Heat broiler is equipped with two independent tubular heating elements which give true radiant broiling. Broiling section is thoroughly insulated and heat is not transmitted to griddle above the broiler. Each element has its own infinite control switch which accurately controls any desired combination of broiling heats. A red signal light indicates if either broiling element is on. The heavy duty broiling grid and drip pan can be used in three different positions. A removable grease drawer for drippings is provided.

CONSTRUCTION

The range is constructed of heavy gauge steel suitably reinforced, welded and fastened together for maximum strength and rigidity. The unit is durable and designed to give years of satisfactory service.

FINISH

The body and high shelf panel have a new Silvertone Finish which is a specially developed process for Vulcan. Front tops on cooking surface and griddle are made of gleaming stainless steel that will withstand heavy use. As an optional extra unit may be ordered with body front, sides and high shelf panel in stainless steel.

HIGH SHELF

A full width utility shelf and back splash is securely mounted on the range frame. This 9½″ wide shelf is 18½″ above the surface of the range allowing the use of pots on cooking top. It provides a convenient place for plates, utensils, etc.

ELECTRICAL

Unit available in all standard voltages (see page 4). The range is fully equipped with magnetic circuit breakers which provide complete protection. All wire is of high grade stranded copper with heavy impregnated asbestos insulation. All servicing can be done from front or top of range. It is never necessary to move range from the installed position. All controls, switches, and pilot lights are located on panels immediately under the top front of the range for easy operation.

NOW YOU CAN COOK, GRILL, BROIL,

It's New It's Modern It's *ELECTRIC*

DESIGNED FOR

SCHOOLS • RESTAURANTS • CHURCHES • COFFEE SHOPS • LODGES
CONVALESCENT HOMES • RESORTS • DIET KITCHENS • HOSPITALS
PLANT CAFETERIAS

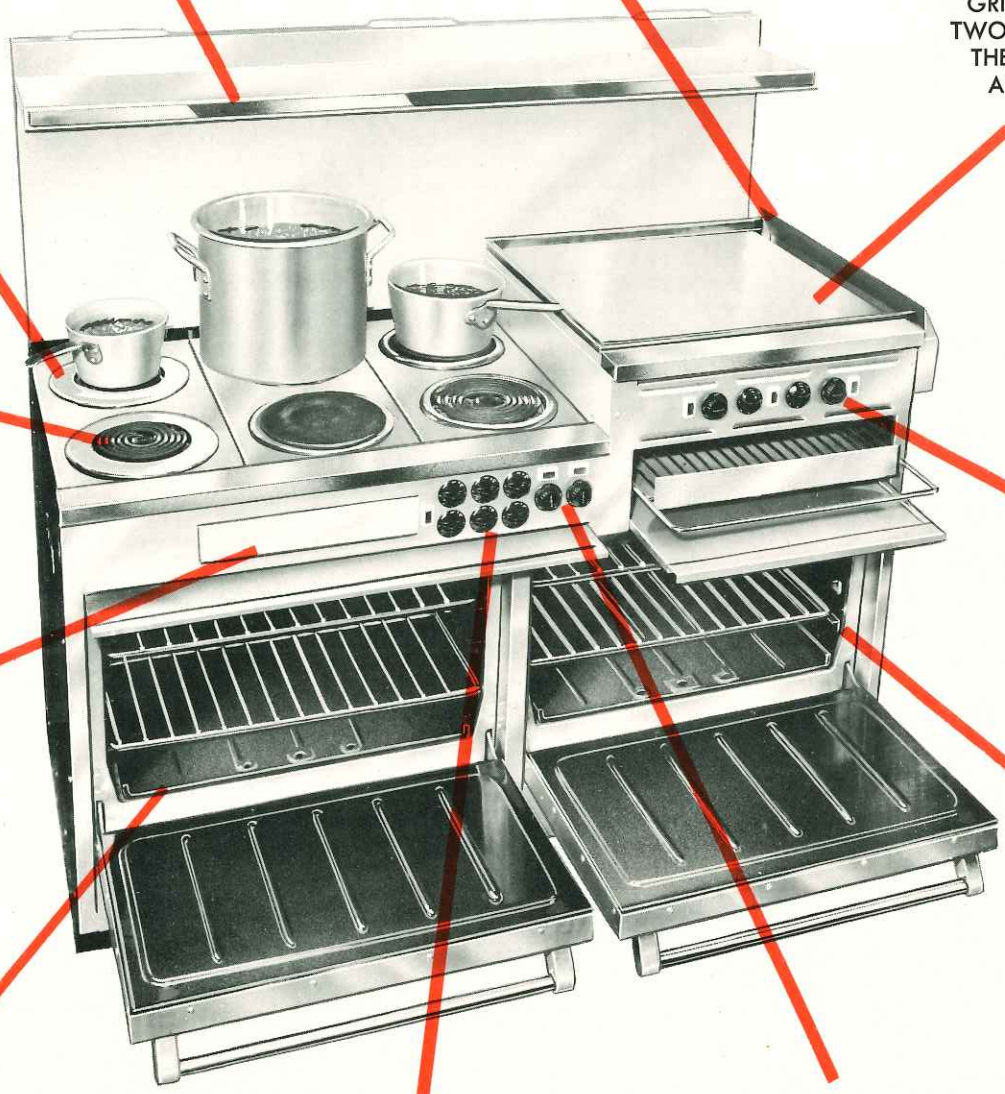

MODEL-E260

BAKE AND ROAST *ELECTRICALLY*

VULCAN *Electric* RESTAURANT RANGE

SPECIFICATIONS

FEATURES . . .

1. 6 Hi-Heat Surface Units
2. 24″ x 24″ Griddle w/2 Thermostats 150°-450° F with Pilot Lights
3. Broiler—Effective grid area 21″ x 18″ w/2 infinite control switches
4. 2 Ovens 26″w x 22½″d x 13¼″h w/150°-550° F thermostats and pilot lights
5. Complete safety protection W/12 circuit breakers
6. Full width backguard and high shelf

BREAKER NUMBER	LOADING
1 1	3 Front surface units 1.5 KW, 2.0 KW, 2.4 KW—Total 5.9 KW
2 2	3 Back surface units 1.5 KW, 2.0 KW, 2.4 KW—Total 5.9 KW
3 3	Left Oven 5.0 KW
4 4	Right Oven 5.0 KW
5 5	Left broiler and griddle 2.4 KW & 3.4 KW—Total 5.8 KW
6 6	Right broiler and griddle 2.4 KW & 3.4 KW—Total 5.8 KW
Total Connected	33.4 KW
Total 3—Phase	X-Y—11.6 KW, Y-Z—10.9 KW, X-Z—10.9 KW

Standard Voltages	Nominal amps per line wire			
	3-Phase			1-Phase
	X	Y	Z	
115/230 or 230	84.7	84.7	82.1	145.2
120/208 or 208	93.7	93.7	90.8	160.6

Approximately Shipping Weight 875 Lbs.

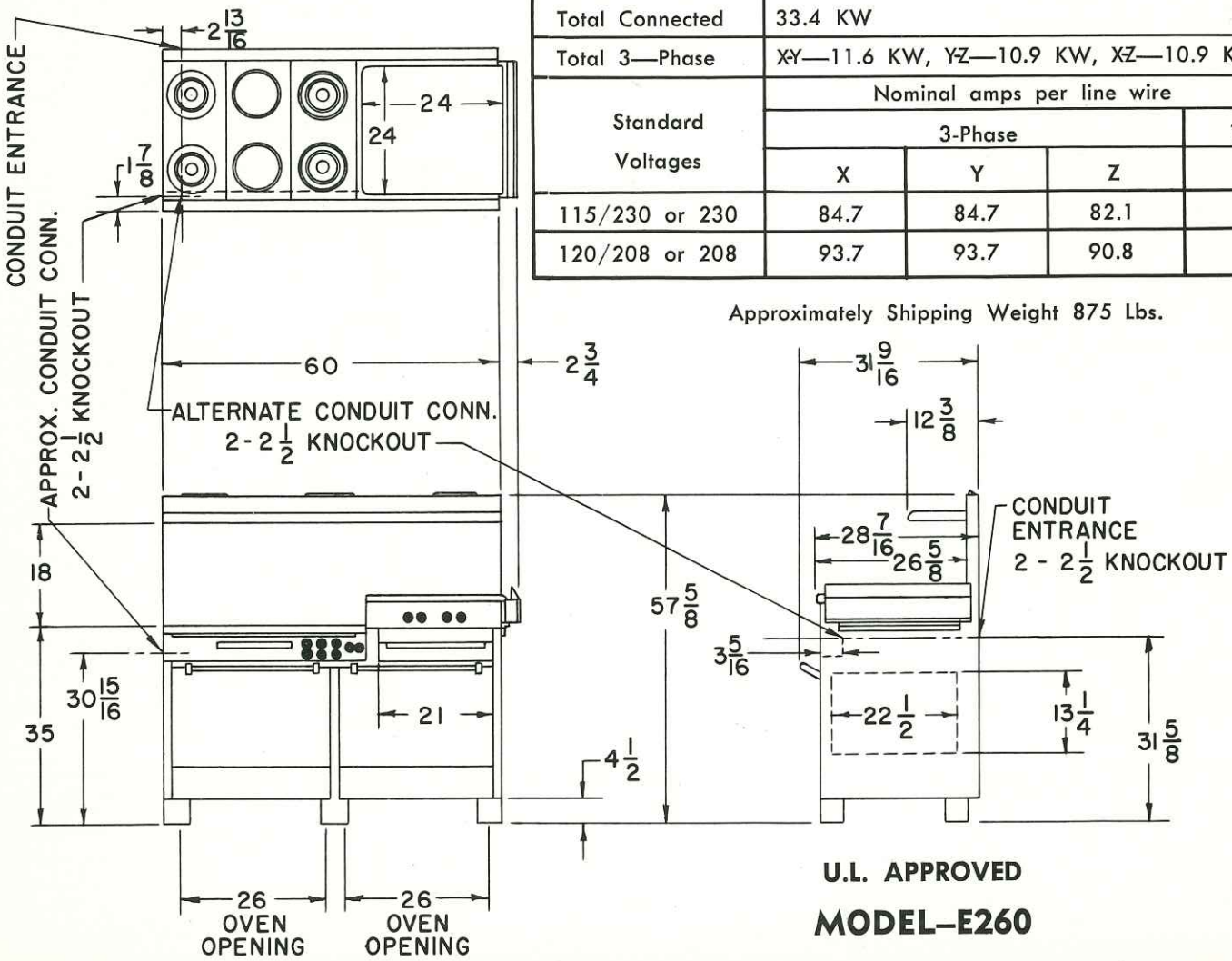

U.L. APPROVED

MODEL—E260

VULCAN-HART MANUFACTURING COMPANY, INCORPORATED

3600 NORTH POINT BOULEVARD, BALTIMORE 22, MARYLAND

Form No. VH-160

Litho U.S.A.

U. S. Patent Office
MAR 9 1959
Design Division

VULCAN
Electric
COMMERCIAL COOKING EQUIPMENT